Project: Dragon Café Canopy
Oregon Convention center
Portland, OR
Client: **Josh Lipscomb/Metro**

Date: 9/17/13
Page: 1
By: JTW
Job #: 213167

STRUCTURAL CALCULATIONS
FOR
INTERIOR CANOPY

- TWO HORIZ TUBES RESIST TORSION
- EXISTING COLUMN SUPPORTS TUBES

REGISTERED PROFESSIONAL ENGINEER
14725
OREGON
JAN. 23, 1990
ROBERT GRUMMEL
EXPIRES 6/30/15

Project: Dragon Café Canopy
Oregon Convention center
Portland, OR
Client: **Josh Lipscomb/Metro**

Date: 9/17/13
Page: 2
By:
Job #: 213167

CANOPY DESIGN

$W_{PL} = 20$ psf

INTERIOR (NO SNOW LOAD)

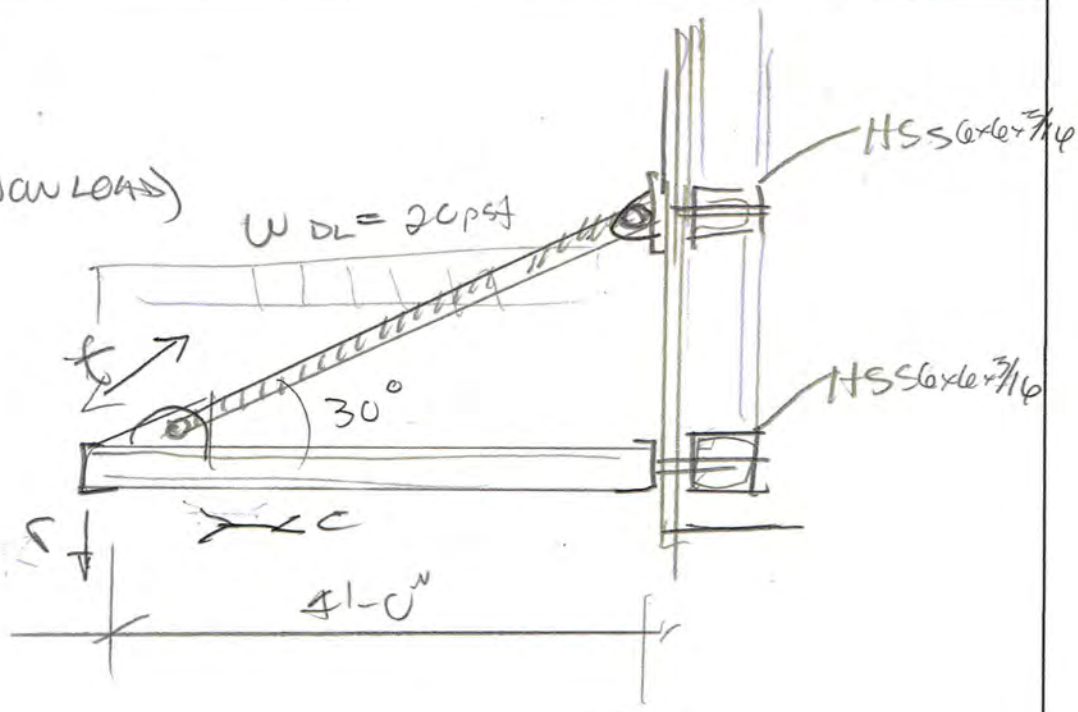

$r = 40$ PLF

$f = \frac{r}{\sin 30} = 80$ PLF

$c = \frac{r}{\tan 30} = 70$ PLF

CHECK TUBE FOR HORIZONTAL LOAD

$L = 19$ FT

$W_{HORIZ} = 70$ PLF

$M = \frac{wl^2}{8} = 3159$ lb-ft $= 37.9$ k-in

$S_{REQD} = \frac{M}{46(1.67)} = 1.22$ in^4

TRY 6x6x3/16

$I = 22.3$

$\Delta = 0.31 = L/718$ OK

TRY 5x5x3/16

$S = 5.03$ in^3

$I = 12.6$

$\Delta = \frac{5(70/12)(19 \times 12)^4}{384(29 \times 10^6)(12.6)}$

$\Delta = 0.56 = L/$

Project: Dragon Café Canopy
Oregon Convention center
Portland, OR
Client: **Josh Lipscomb/Metro**

Date: 9/17/13
Page: 3
By:
Job #: 213167

TENSION MEMBER

SPACING = 5 FT

T = 400 LB

USE 3/8 ϕ ROD

FRAME MEMBERS

L = 5'-0"

W = 40 PLF

$M = \frac{wl^2}{8} = 125$ LB-FT

USE 8×2×3/16

Project: Dragon Café Canopy
Oregon Convention center
Portland, OR
Client: **Josh Lipscomb/Metro**

Date: 9/14/13
Page: 4
By:
Job #: 213167

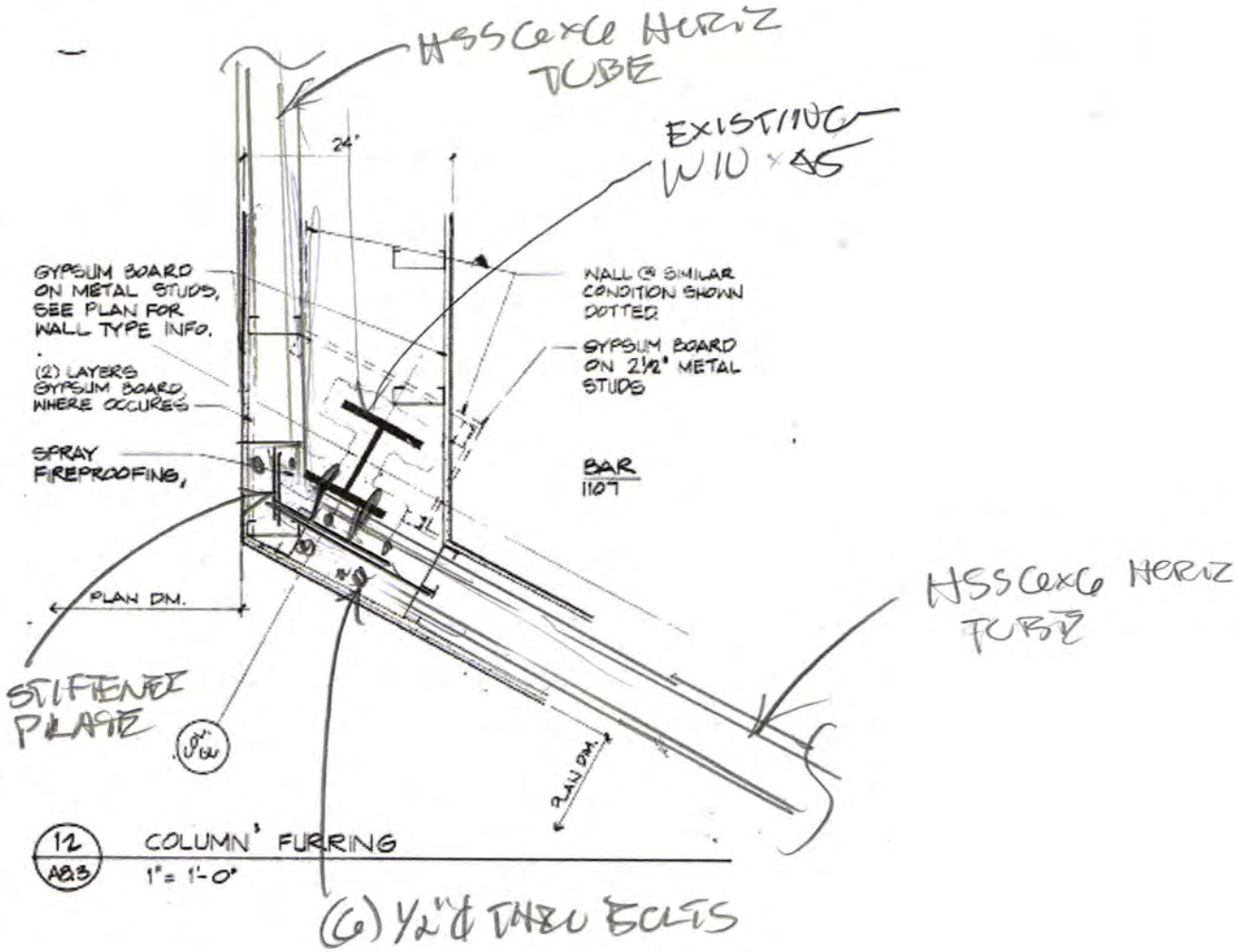

EXISTING COLUMN

TRIB ROOF ≈ 400 S.F.

$P_{EXISTING} \approx 16{,}000$ LB

$P_{NEW} = (10\text{ psf})(4\text{ FT AVG WIDTH})(12\text{ FT TRIB}) = 480$ LB

$\Delta = 3\%$ OK

MOMENT

$M = 480 \times 24'' = 11.5$ K-in

$\frac{M_n}{\Omega} = 1178$ K-in OK

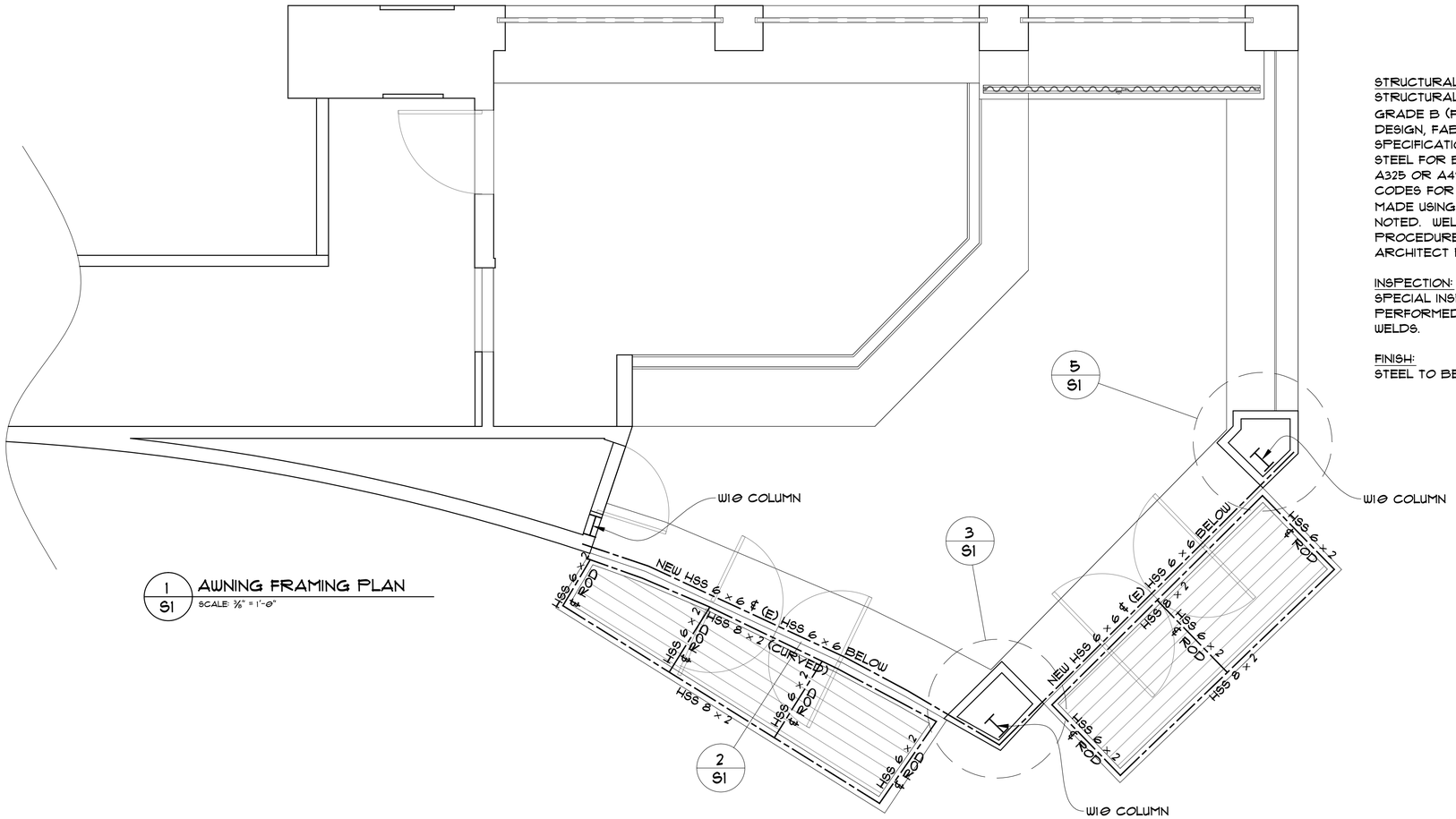

1 S1 AWNING FRAMING PLAN
SCALE: 3/8" = 1'-0"

GENERAL STRUCTURAL NOTES

STRUCTURAL STEEL:
STRUCTURAL STEEL SHALL BE ASTM A36, AS NOTED. TUBES SHALL BE ASTM A500, GRADE B (FY=46KSI). PIPES SHALL BE ASTM A501 OR ASTM A53, GRADE B. DESIGN, FABRICATION, AND ERECTION SHALL BE IN ACCORDANCE WITH THE "AISC SPECIFICATION FOR THE DESIGN, FABRICATION AND ERECTION OF STRUCTURAL STEEL FOR BUILDINGS". BOLTS SHALL CONFORM TO THE ASTM SPECIFICATION FOR A325 OR A490, HIGH STRENGTH BOLTS. WELDING SHALL CONFORM TO THE AWS CODES FOR ARC AND GAS WELDING IN BUILDING CONSTRUCTION. WELDS SHALL BE MADE USING E70XX ELECTRODES AND SHALL BE 3/16" MINIMUM UNLESS OTHERWISE NOTED. WELDING SHALL BE BY AWS CERTIFIED WELDERS. PREQUALIFIED WELDING PROCEDURES ARE TO BE USED, UNLESS AWS QUALIFICATION IS SUBMITTED TO THE ARCHITECT PRIOR TO FABRICATION.

INSPECTION:
SPECIAL INSPECTION BY AN APPROVED SPECIAL INSPECTOR SHALL BE PERFORMED FOR ALL METAL FABRICATION, AND VISUAL INSPECTION FOR ALL WELDS.

FINISH:
STEEL TO BE PRIMED AND PAINTED WITH DTM PAINT FINISH.

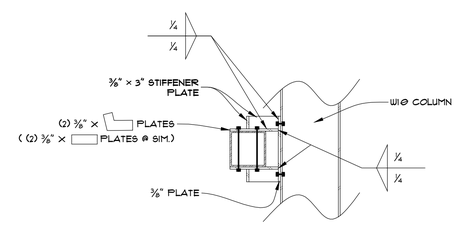

4 S1 COLUMN CONNECTION DETAIL
SCALE: 1" = 1'-0"

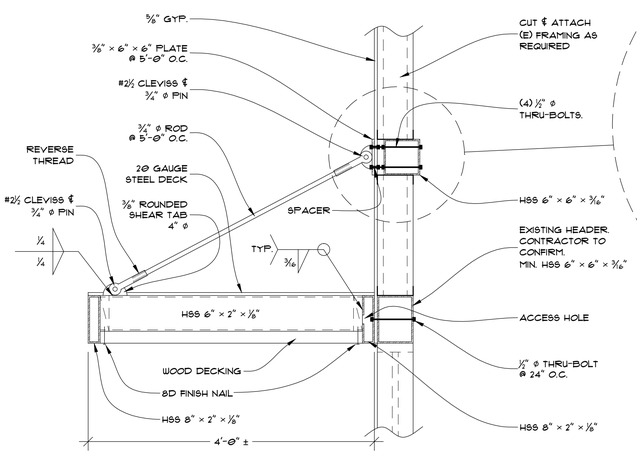

2 S1 AWNING SECTION
SCALE: 1" = 1'-0"

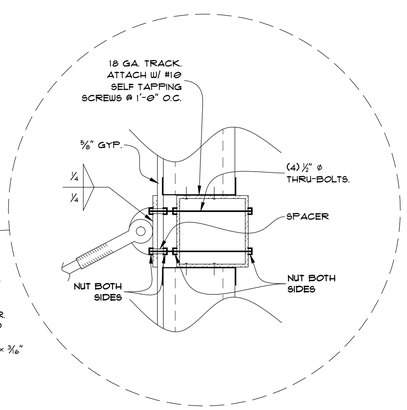

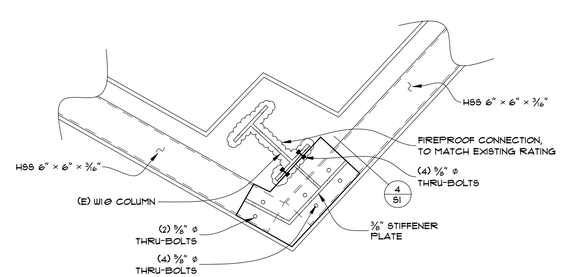

3 S1 COLUMN CONNECTION DETAIL
SCALE: 1" = 1'-0"

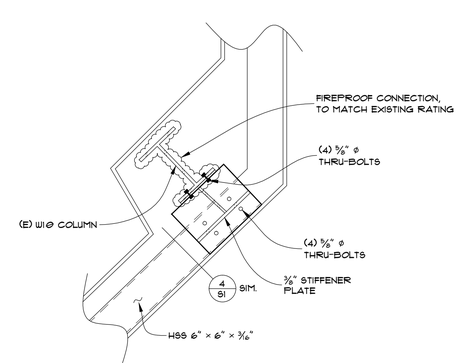

5 S1 COLUMN CONNECTION DETAIL
SCALE: 1" = 1'-0"

REGISTERED PROFESSIONAL ENGINEER 14725 OREGON JAN. 23, 1999 ROBERT GRUMMEL
EXPIRES 6/30/15

GRUMMEL ENGINEERING, LLC
7421 SE POWELL BLVD.
PORTLAND, OR 97206 - (503) 244-7014

Oregon Convention Center Dragon Cafe Remodel

1234 Street Name
Portland, OR 97200

9/17/2013

PROJECT NUMBER: 213167

ENGINEER: JJW

AWNING FRAMING PLAN & DETAILS

S1