6161 NW 61ST AVENUE
METRO CENTRAL STATION, TRUCK WASH

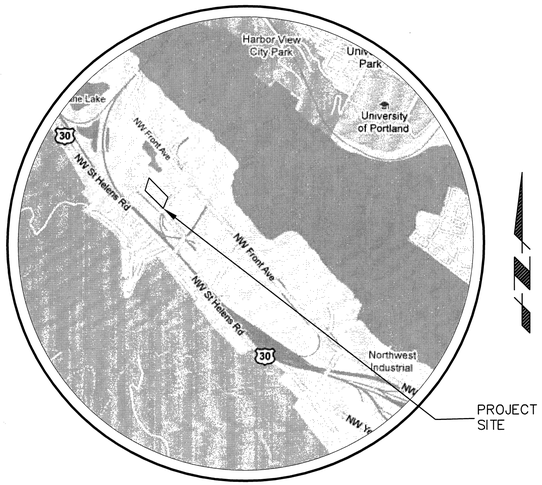

VICINITY MAP

NOT TO SCALE

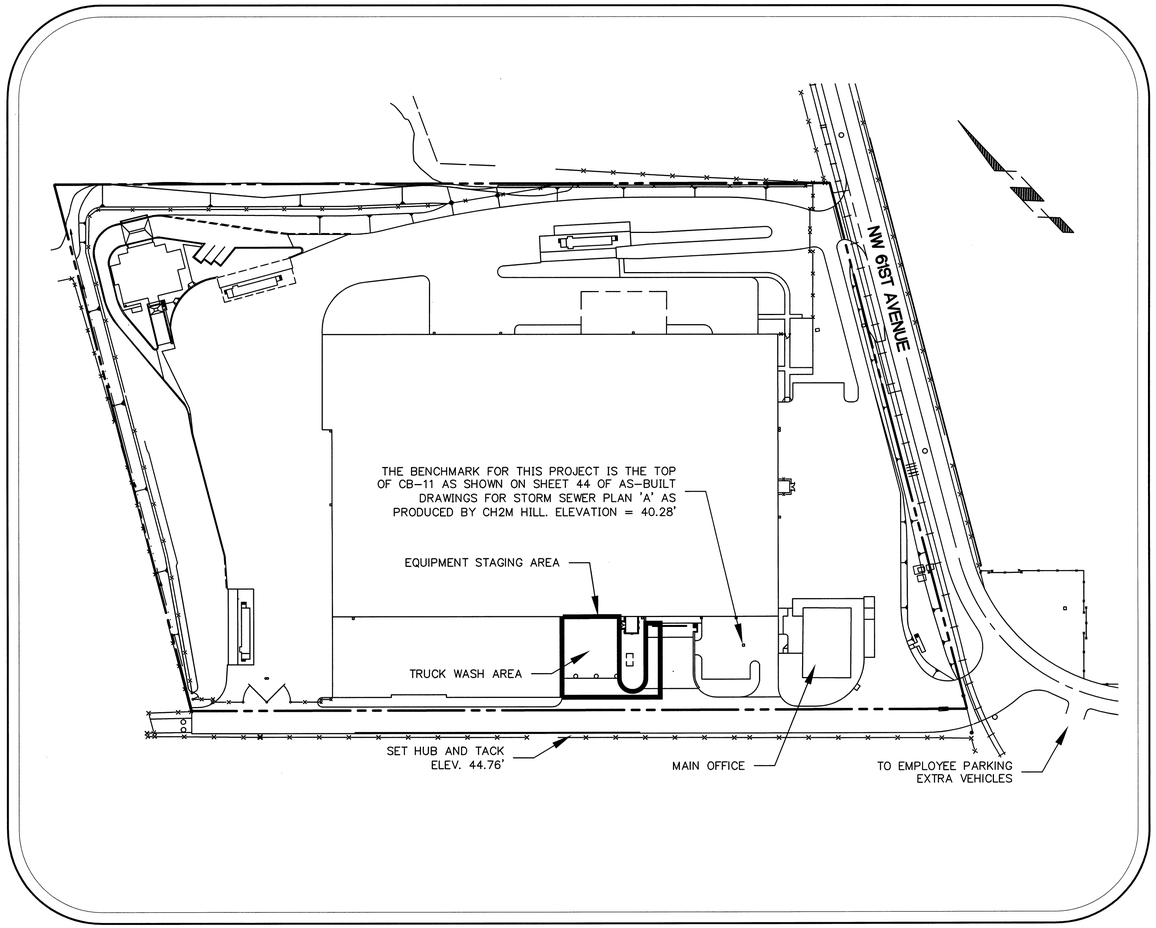

SITE MAP

1" = 80'

GENERAL NOTES

1. ALL MATERIALS AND WORKMANSHIP SHALL CONFORM TO MOST RECENT CITY OF PORTLAND CONSTRUCTION STANDARDS AND SPECIFICATIONS.
2. DURING CONSTRUCTION, THE CONTRACTOR AND/OR SUB CONTRACTORS SHALL HAVE A MINIMUM OF ONE FULL SIZE SET OF APPROVED FOR CONSTRUCTION PLANS AND SPECIFICATIONS ON THE JOB AT ALL TIME.
3. ANY REVISIONS MADE TO THESE PLANS MUST BE REVIEWED AND APPROVED BY THE ENGINEER, AND METRO STAFF PRIOR TO ANY IMPLEMENTATION IN THE FIELD.
4. THE CONTRACTOR SHALL HAVE ALL UTILITIES VERIFIED AND LOCATED ON THE GROUND PRIOR TO ANY CONSTRUCTION. THE OWNER AND THE ENGINEER SHALL BE CONTACTED IMMEDIATELY IF A CONFLICT EXISTS.
5. THE CONTRACTOR SHALL AT ALL TIMES ABIDE BY APPLICABLE SAFETY RULES OF O.S.H.A. AND IN PARTICULAR THOSE PERTAINING TO ADEQUATE SHORING AND TRENCH PROTECTION.
6. THE CONTRACTOR SHALL INSTALL AND MAINTAIN ALL REQUIRED EROSION CONTROL MEASURES IN ACCORDANCE WITH THE MOST CURRENT CITY OF PORTLAND EROSION AND SEDIMENTATION STANDARDS.
7. UTILITY LOCATIONS ARE APPROXIMATE ONLY, EXACT LOCATIONS TO BE DETERMINED IN THE FIELD BY THE CONTRACTOR. THE CONTRACTOR SHALL BE RESPONSIBLE FOR LOCATING ALL UTILITIES NOT SHOWN ON THE PLANS. THE CONTRACTOR SHALL COORDINATE WORK WITH ALL UTILITY COMPANIES AS REQUIRED TO COMPLETE THE PROJECT.
8. ALL DAMAGE CAUSED BY THE CONTRACTOR SHALL BE RESTORED TO AN "AS GOOD OR BETTER" CONDITION AT CONTRACTOR'S EXPENSE AND NO ADDITIONAL COST TO OWNER.
9. CONTRACTOR TO REMOVE AND DISPOSE OF ALL EXCESS MATERIALS, EXCAVATED FROM THE SITE, IN APPROVED ON-SITE LOCATION AS NECESSARY FOR COMPLETION OF CONSTRUCTION EFFORTS. THERE WILL BE NO ADDITIONAL CHARGE FROM METRO FOR DISPOSAL.
10. SUBMIT WRITTEN CERTIFICATION TO METRO THAT PROJECT OR DESIGNATED PORTION OF PROJECT IS SUBSTANTIALLY COMPLETE. CONTRACTOR WILL SUBMIT A PUNCH LIST OF ITEMS TO BE COMPLETED OR CORRECTED. METRO WILL MAKE AN INSPECTION AFTER RECEIPT OF CONTRACTOR'S CERTIFICATION. IF METRO THEN CONSIDERS THE WORK TO BE SUBSTANTIALLY COMPLETE, METRO WILL ISSUE A CERTIFICATE OF SUBSTANTIAL COMPLETION, WITH APPROPRIATE CONDITIONS, ACCOMPANIED BY THE CONTRACTOR'S PUNCH LIST, AS VERIFIED AND AMENDED BY METRO. OMISSION OF ANY ITEM FROM THE LIST SHALL NOT RELIEVE CONTRACTOR FROM RESPONSIBILITY TO COMPLETE ALL THE WORK IN ACCORDANCE WITH THE CONTRACT. SHOULD METRO CONSIDER THAT WORK IS NOT SUBSTANTIALLY COMPLETE; METRO WILL NOTIFY CONTRACTOR, IN WRITING STATING REASONS AND LIST OF ITEMS. CONTRACTOR SHALL COMPLETE WORK AND SEND SECOND WRITTEN NOTICE TO METRO CERTIFYING THAT PROJECT OR DESIGNATED PORTION OF PROJECT IS SUBSTANTIALLY COMPLETE. GUARANTEE AND WARRANTY PERIODS BEGIN WITH THE DATE OF FINAL ACCEPTANCE.

PROJECT TEAM

CLIENT

METRO
ROB SMOOT, P.E.
600 NE GRAND AVENUE
PORTLAND, OR 97232-2736
PH 503-797-1689
FAX 503-797-1795

CIVIL ENGINEER

DON CUSHING, PE
DON CUSHING ASSOCIATES
6650 SW REDWOOD LANE, SUITE 235
PORTLAND, OR 97224
PH 503-620-7884
FAX 503-620-2771

SURVEYOR

MIKE RENNICK, PLS
BASELINE SURVEYING, LLC
2505 PORTLAND ROAD, SUITE 206
NEWBERG, OR 97132
PH 503-538-8041
FAX 503-538-1204

SHEET INDEX

C1.0	COVER SHEET
C2.0	EXISTING CONDITIONS/DEMOLITION PLAN/EROSION CONTROL
C3.0	SITE/DETAILS
C4.0	GRADING/DETAILS

PROJECT LOCATION

6161 NW 61ST AVENUE
PORTLAND, OR 97210

PROPERTY DESCRIPTION

SECTION 13 1 N 1 W; TL 600 10.43 ACRES

REGISTERED PROFESSIONAL ENGINEER 14662 OREGON DEC. 07, 1989 DON CUSHING

RENEWAL DATE 12/31/09

cushing associates

Don Cushing Associates
Civil Engineers
6650 SW Redwood Lane, Suite 235, Portland, OR 97224
(503) 620-7884 • Fax: (503) 620-2771 • www.cushing-engr.com

THIS DRAWING IS COPYRIGHTED AND IS THE SOLE PROPERTY OF THE OWNER. IT IS PRODUCED SOLELY FOR USE BY THE OWNER AND ITS AFFILIATES. REPRODUCTION OR USE OF THIS DRAWING AND/OR THE INFORMATION CONTAINED IN IT IS FORBIDDEN WITHOUT THE WRITTEN PERMISSION OF THE OWNER.

METRO CENTRAL STATION
TRUCK WASH
6161 NW 61ST AVENUE
PORTLAND, OR 97210

DATE	RELEASE
6/19/09	30% SUBMITTAL
8/25/09	70% SUBMITTAL
9/24/09	85% SUBMITTAL
11/10/09	90% SUBMITTAL

JOB NUMBER:	09-003
DRAWN BY:	AKS
CHECKED BY:	DC

SHEET TITLE

COVER SHEET

SHEET NUMBER

C1.0 OF 4

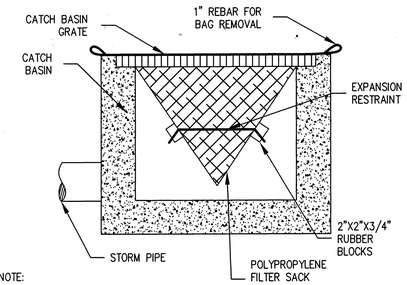

NOTE:

1. CATCH BASINS MUST USE BLOCKS WHEN USING FILTER FABRIC INLET SACKS. SIZE OF FILTER FABRIC INLET SACKS TO BE DETERMINED BY MANUFACTURE.

1 INLET PROTECTION
N.T.S.

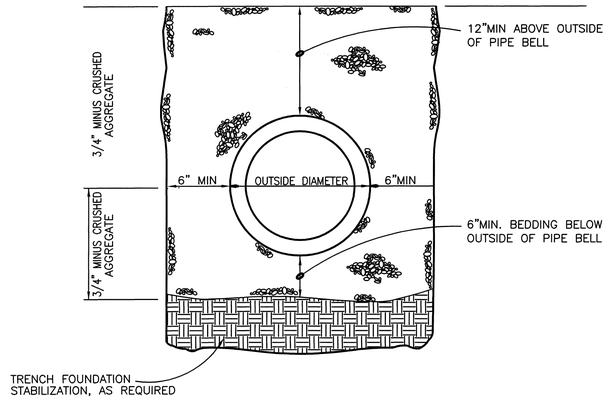

2 TRENCH SECTION
N.T.S.

DEMOLITION, EXCAVATION
GENERAL – EXCAVATE AND DISPOSE OF EXCESS MATERIALS SUCH AS CONCRETE, TRENCH DRAINS, AND SANITARY PIPE AT THE METRO CENTRAL STATION, AS DIRECTED BY METRO. DISPOSAL OF MATERIAL AT METRO CENTRAL STATION WILL BE AT NO ADDITIONAL COST TO THE CONTRACTOR.
LINES, GRADES AND CROSS SECTIONS – EXCAVATE TO THE DEPTHS, GRADES, AND CROSS SECTIONS SHOWN ON THE PLANS. VARIATIONS WILL BE PERMITTED ONLY WHEN NECESSARY TO ENSURE PROPER DRAINAGE AND WHEN SUCH VARIATIONS WILL NOT BE DETRIMENTAL TO THE WORK. EXCAVATE ALLOWING FOR FORMS, SHORING, WORKING SPACE, GRAVEL OR SAND BASE, AND FINISH TOPSOIL WHERE REQUIRED. DO NOT EXCAVATE DEEPER THAN ELEVATION SHOWN WITHOUT APPROVAL.
CONCRETE, CURB – USE SAWS TO CUT PORTLAND CEMENT CONCRETE, CURBS, REGARDLESS OF THICKNESS. SAW CUT PORTLAND CEMENT CONCRETE PAVEMENT TO A MINIMUM OF 12 INCHES TOTAL DEPTH. SAW CURBS TO A MINIMUM DEPTH OF SIX (6) INCHES. SUBSEQUENT REMOVAL MAY BE ACCOMPLISHED BY USING A JACKHAMMER OR OTHER APPROVED METHOD. FULL DEPTH CUT BY PAVEMENT SAW CAN BE DONE AT OPTION OF CONTRACTOR, BUT AT NO ADDITIONAL COST TO METRO. USE OF ANY MACHINE UTILIZING A FALLING OR SWINGING WEIGHT WILL NOT BE PERMITTED. UPON COMPLETION OF BACKFILL AND JUST PRIOR TO RE-SURFACING INSPECT FOR AREAS OF ANY UNDERMINED OR DAMAGED SURFACING, RE-SAW TO A WIDTH OUTSIDE THESE AREAS. ALL SLURRY DEVELOPED DURING THE SAW CUTTING PROCESS IS TO BE REMOVED USING A VACUUM CONTINUOUSLY DURING OPERATION. IN REMOVING THE SLAB, CURB AND SIMILAR STRUCTURES, ALL CUTS WHERE AN ABUTTING STRUCTURE OR A PART OF A STRUCTURE ARE TO BE LEFT IN PLACE SHALL BE CLEAN, SMOOTH, VERTICAL CUTS MADE WITH A CONCRETE SAW OR OTHER APPROVED CUTTING DEVICE TO LINES AS ESTABLISHED.

PRESERVATION OF EXISTING IMPROVEMENTS – CONDUCT OPERATIONS IN SUCH A MANNER THAT EXISTING FACILITIES, UTILITIES, STRUCTURES THAT ARE TO REMAIN IN PLACE WILL NOT BE DAMAGED. FURNISH AND INSTALL CRIBBING AND SHORING OR WHATEVER MEANS NECESSARY TO SUPPORT MATERIAL AROUND EXISTING FACILITIES, OR TO SUPPORT THE FACILITIES THEMSELVES, AND MAINTAIN SUCH SUPPORTS UNTIL NO LONGER NEEDED, AT NO EXPENSE TO METRO. USE HAND EXCAVATION METHODS WHEN NORMAL METHODS CANNOT BE ACCOMPLISHED WITHOUT ENDANGERING EXISTING OR NEW STRUCTURES OR OTHER FACILITIES. WHEN THE PRECISE LOCATION OF SUBSURFACE STRUCTURES IS UNKNOWN, LOCATE SUCH STRUCTURES BY HAND EXCAVATION PRIOR TO UTILIZING MECHANICAL EXCAVATION EQUIPMENT. PROTECT TEMPORARY FACILITIES, UNTIL THEY ARE NO LONGER REQUIRED, AND WHEN TEMPORARY SUPPORTS AND OTHER PROTECTIVE MEANS ARE NO LONGER REQUIRED, REMOVE AND DISPOSE OF AS DIRECTED.
TRENCH WIDTH – KEEP THE TRENCH WIDTH AT THE GROUND SURFACE TO THE MINIMUM NECESSARY TO INSTALL THE PIPE IN A SAFE MANNER. IN ALL CASES, MAKE TRENCHES OF SUFFICIENT WIDTH TO ALLOW FOR SHORING AND TO PERMIT PROPER JOINTING OF THE PIPE AND BACKFILLING OF MATERIAL ALONG THE SIDES OF THE PIPE.
COMPACTION AND DENSITY MEASUREMENT – THE AGGREGATE BASE ROCK, ¾"-0", SHALL BE PLACED IN 6 INCH (MAXIMUM COMPACTED DEPTH) LIFTS TO A COMPACTION DENSITY OF 95% OF THE MAXIMUM DRY DENSITY PER AASHTO T 99. IN-PLACE DENSITY OF AGGREGATE WILL BE DETERMINED IN ACCORDANCE WITH ASTM 2922. TWO EVENLY SPACED TESTS SHALL BE CONDUCTED PER EACH TRUCK WASH BAY.

UN-TESTABLE BACKFILL – ALL MATERIALS AND AREAS WHICH ARE NOT SUSCEPTIBLE TO TESTING FOR DENSITY, AS DETERMINED BY THE ENGINEER, SHALL BE COMPACTED IN PLACE BY WHATEVER EQUIPMENT AND METHOD IS PRACTICABLE OR SPECIFIED, AND AS APPROVED. COMPACTION SHALL BE PERFORMED AT SUCH MOISTURE CONTENT AS IS REQUIRED TO PRODUCE WELL FILLED, DENSE AND FIRM MATERIAL IN PLACE SHOWING NO APPRECIABLE DEFLECTION OR REACTION UNDER THE COMPACTING EQUIPMENT USED.

INADEQUATE DENSITY – IF REQUIRED COMPACTION DENSITY HAS NOT BEEN OBTAINED, REMOVE THE BACKFILL FROM AREA IN QUESTION, REPLACE WITH APPROVED BACKFILL, AND RECOMPACT TO THE SPECIFIED DENSITY. THEN, SHOULD ROUTINE FIELD DENSITIES TAKEN DURING THE COURSE OF CONSTRUCTION SHOW THE SPECIFIED COMPACTION IS NOT BEING OBTAINED BECAUSE OF CHANGES IN SOIL TYPES OR FOR ANY OTHER REASON, MODIFY THE BACKFILL COMPACTION PROCEDURE. IN NO CASE WILL EXCAVATION AND PIPE-LAYING OPERATIONS BE ALLOWED TO PROCEED UNTIL THE SPECIFIED COMPACTION IS ATTAINED. THE ENGINEER WILL HAVE THE RIGHT TO REQUIRE CHANGES IN METHODS TO ACCOMMODATE CHANGES IN SOIL CONDITIONS.

SUBSEQUENT SETTLEMENT – ANY SUBSEQUENT SETTLEMENT OF TRENCH AND ADJACENT PAVEMENT AREAS DURING THE MAINTENANCE WARRANTY PERIOD SHALL BE CONSIDERED TO BE THE RESULT OF IMPROPER COMPACTION AND SHALL BE PROMPTLY CORRECTED.

GRAPHIC SCALE

(IN FEET)
1 inch = 10 ft.

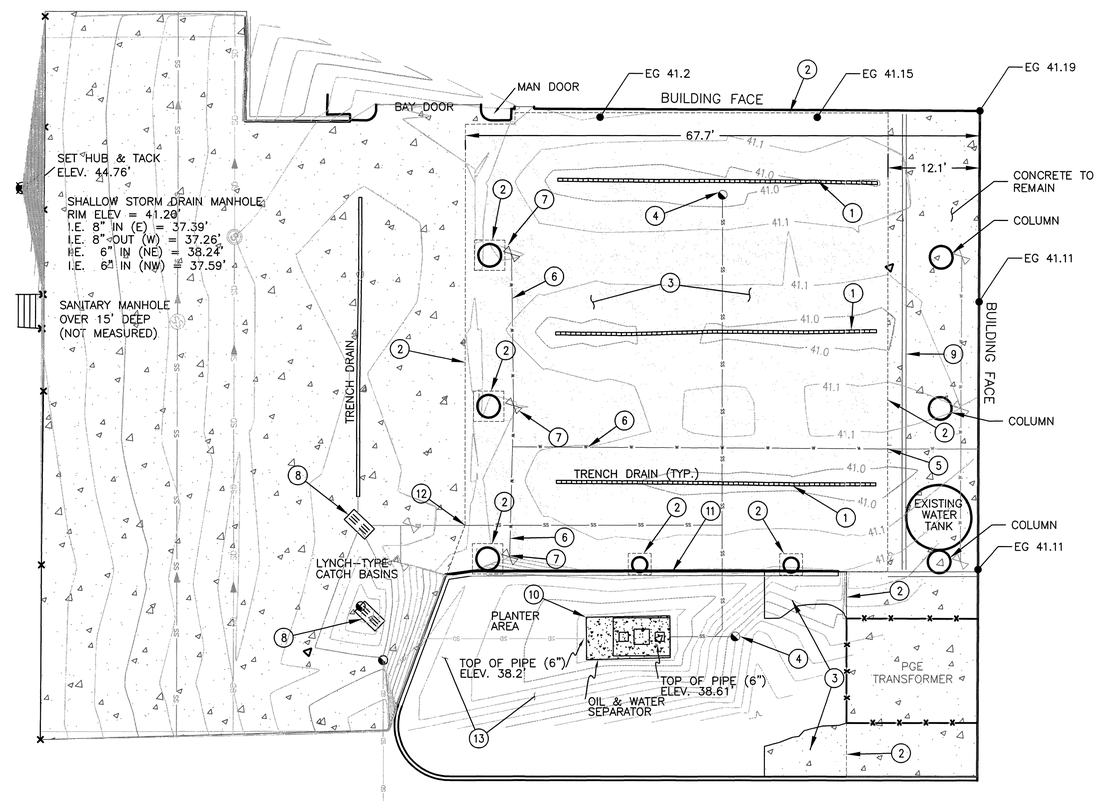

DEMOLITION KEYNOTES

1. REMOVE EXISTING TRENCH DRAINS (3 TOTAL)
2. ALL EXISTING PORTLAND CEMENT CONCRETE SHALL BE SAWCUT TO A DEPTH OF 12" AROUND COLUMNS AND PUSH WALL TO PROTECT FOOTINGS. SAWCUTING NEAR COLUMNS AND NORTHWEST PUSH WALL SHALL BE 6" OFF OF COLUMNS AND WALL, EXCEPT AT SMALLER COLUMNS, CUT AT EDGE OF FOUNDATION AND SLAB..
3. REMOVE EXISTING CONCRETE
4. REMOVE EXISTING CLEANOUTS AND ASSOCIATED 6" PIPE
5. CAP EXISTING WATERLINE AND TERMINATE HEAT TAPE, COORDINATE WITH METRO
6. REMOVE EXISTING WATERLINE TO THE EXTENT SHOWN ON PLANS
7. REMOVE EXISTING WATER SPIGOT LOCATIONS (THREE LOCATIONS)
8. PROTECT EXISTING CATCH BASINS, INSTALL ACF ENVIRONMENTAL® SILT SACK OR EQUAL (1 / C2.0)
9. EXISTING WHEEL GUIDES TO REMAIN, TO BE REMOVED BY OTHERS BEFORE CONSTRUCTION
10. DISCONNECT, REMOVE AND DISPOSE OF EXISTING OIL WATER SEPARATOR, PER HEALTH DEPT REGULATIONS
11. REMOVE 61.5 LF OF EXISTING CURB
12. CAP EXISTING SANITARY LINE DURING CONSTRUCTION, PROVIDE ALTERNATE STORMWATER CONTROL UNTIL LINE IS RECONNECTED
13. REMOVE NECESSARY AMOUNT OF SOIL AND IRRIGATION PIPES FROM PLANTER AREA IN PREPARATION FOR PERMEABLE PAVERS

LEGEND

- TRENCH DRAIN
- CATCH BASIN
- STORM DRAINAGE MANHOLE
- SANITARY SEWER MANHOLE
- WATER VALVE
- CLEAN OUT
- SURVEY CONTROL POINT
- 42.5 EXISTING 0.5' CONTOUR
- 42.1 EXISTING 0.1' CONTOUR
- EXISTING STORM LINE
- EXISTING WATER LINE
- EXISTING SANITARY LINE
- WATER LINE TO BE REMOVED
- EXISTING SANITARY TO BE REMOVED
- EXISTING FENCE

REGISTERED PROFESSIONAL ENGINEER 14662 OREGON DEC. 07, 1989 DON CUSHING
RENEWAL DATE 12/31/09

cushing Civil Engineers
Don Cushing Associates
Civil Engineers
6650 SW Redwood Lane, Suite 235, Portland, OR 97224
(503) 620-7884 • Fax: (503) 620-2771 • www.cushing-engr.com

THIS DRAWING IS COPYRIGHTED AND IS THE SOLE PROPERTY OF THE OWNER. IT IS PRODUCED SOLELY FOR USE BY THE OWNER AND ITS AFFILIATES. REPRODUCTION OR USE OF THIS DRAWING AND/OR THE INFORMATION CONTAINED IN IT IS FORBIDDEN WITHOUT THE WRITTEN PERMISSION OF THE OWNER.

METRO CENTRAL STATION
TRUCK WASH
6161 NW 61ST AVENUE
PORTLAND, OR 97210

DATE	RELEASE
6/19/09	30% SUBMITTAL
8/25/09	70% SUBMITTAL
9/24/09	85% SUBMITTAL
11/10/09	90% SUBMITTAL
–	–
–	–
–	–
–	–
–	–
–	–
–	–
–	–
–	–

JOB NUMBER:	09-003
DRAWN BY:	AKS
CHECKED BY:	DC

SHEET TITLE
EXISTING CONDITIONS / DEMO / EC PLAN

SHEET NUMBER
C2.0 OF 4

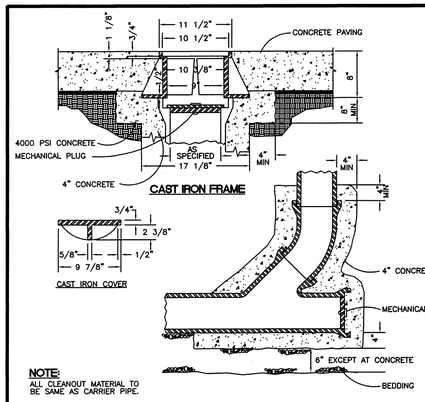

NOTE:
ALL CLEANOUT MATERIAL TO BE SAME AS CARRIER PIPE.

1 CLEANOUT
N.T.S.

COMMERCIAL GRADE CONCRETE (CGC)

PROPORTIONING, MIXTURE, AND ACCEPTANCE OF MATERIALS FOR CGC SHALL COMPLY WITH 00440.11, 00440.12, 00440.13, AND 00440.14 OF THE CITY OF PORTLAND STANDARD CONSTRUCTION SPECIFICATIONS.
PROPORTIONING OF CGC MIXTURE – BEFORE USING ANY CGC ON THE PROJECT, FURNISH IN WRITING TO THE ENGINEER, THE PROPORTIONS BY WEIGHT OF THE FOLLOWING MATERIALS, WHEN USED: (1) AIR ENTRAINING ADMIXTURES (2) CEMENT (3) EACH SIZE OF AGGREGATE (4) FLY ASH (5) OTHER ADMIXTURES (6) WATER TOLERANCE AND LIMITS OF CGC MIXTURES – PROVIDE A WORKABLE MIXTURE OF CGC THAT IS UNIFORM IN COMPOSITION AND CONSISTENCY, AND HAS THE FOLLOWING CHARACTERISTICS (1) SLUMP – DO NOT ALLOW SLUMP TO EXCEED 5 INCHES, EXCEPT AS NOTED IN TABLE 02001-3. OF COP CONSTRUCTION SPECS (2) COMPRESSIVE STRENGTH – UNLESS OTHERWISE NOTED, CGC SHALL ATTAIN A 28-DAY COMPRESSIVE STRENGTH OF AT LEAST 4,000 PSI. (3) TEMPERATURE – MIX CGC AT A TEMPERATURE BETWEEN 50 °F AND 90 °F. (4) AIR ENTRAINMENT SHALL BE 5%.

FIELD MIXED CONCRETE – FIELD MIXED CONCRETE CAN BE USED FOR WORK ITEMS LISTED IN 00440.14(A) MAY BE EITHER COMMERCIALLY OR FIELD MIXED.
ACCEPTANCE SAMPLING AND TESTING – ACCEPTANCE SAMPLING AND TESTING WILL BE BASED ON SAMPLES OBTAINED AT THE SITE OF PLACEMENT BEFORE ANY PUMPING, UNLESS PROVIDED OTHERWISE. EACH LOAD DELIVERED TO THE SITE SHALL BE FIELD TESTED FOR AIR ENTRAINMENT AND SLUMP. THE CONTRACTOR SHALL PERFORM ALL REQUIRED SAMPLING AND TESTING.
BATCH WEIGHTS – SEND A BATCH TICKET WITH EACH LOAD RECORDING AND ATTESTING TO THE SOURCE, DAY, TIME OF BATCH (ES), SIZE OF LOAD AND QUANTITY OF INDIVIDUAL CONSTITUENTS IN THE LOAD. A BATCH TICKET WILL NOT BE REQUIRED FOR FIELD-MIXED CONCRETE.
HARDENED CGC – ACCEPTANCE OF THE HARDENED CGC WILL BE ACCORDING TO THE PROVISIONS OF 00540.17(C). CAST ONE SET OF CYLINDERS PER 20 CUBIC YARDS, WITH A MAXIMUM OF ONE SET PER DAY.
CONSTRUCTION MIXING – MIX CGC TO THE EXTENT THAT ENSURES A UNIFORM DISTRIBUTION OF MATERIALS THROUGHOUT THE MASS. PLACING – PLACE CGC ACCORDING TO THE FOLLOWING: (1) PLACE USING THE BEST COMMON PRACTICES TO AVOID SEGREGATION. (2) VIBRATE AND SPADE TO ACHIEVE A DENSE HOMOGENEOUS CONCRETE, FREE OF VOIDS AND ROCK POCKETS. (3) PLACE WITHIN 90 MINUTES AFTER BATCHING AND MIXING.
FORMS – PROVIDE FORMS FOR CGC USING THE BEST COMMON PRACTICE. PLACE TO THE LINES AND GRADES CALLED FOR ON THE PLANS.
WEATHER – DO NOT PLACE CGC WHEN THE AIR TEMPERATURE IS BELOW 35 °F WITHOUT APPROVAL. PROTECT FROM FREEZING IF THE AIR TEMPERATURE IS EXPECTED TO DROP BELOW 35 °F DURING THE FIRST FIVE CALENDAR DAYS AFTER CGC PLACEMENT.
CURING – CURE CGC BY COVERING WITH BURLAP, CANVAS, SAND OR OTHER ACCEPTABLE MATERIAL, AND KEEP MOIST FOR A MINIMUM OF SEVEN CALENDAR DAYS. CURING COMPOUNDS MAY BE USED IF NOT APPLIED TO THE CONCRETE SURFACES OR REINFORCEMENT THAT WILL COME IN CONTACT WITH ADJACENT CONCRETE POURS.
FINISH – GIVE THE CONCRETE SURFACES A BROOMED FINISH.
JOINTS – CONSTRUCT JOINTS OF THE KINDS SHOWN AND WHERE SHOWN OR DIRECTED. JOINT TYPES IN THE CONCRETE PAVEMENT WILL BE CONTRACTION, CONSTRUCTION OR EXPANSION. THEY SHALL BE TRANSVERSE OR LONGITUDINAL, AS SHOWN. EXTEND ALL JOINTS AND JOINT FILLER TO PAVEMENT EDGES OR TO EACH OTHER. JOINTS SHALL NOT VARY FROM SPECIFIED OR INDICATED LINE BY MORE THAN 1/4 INCH. THE TOPS OF JOINT FILLER, WHEN REQUIRED, SHALL BE SLIGHTLY, BUT NOT MORE THAN 1/8 INCH, BELOW AND PARALLELING FINISHED PAVEMENT GRADE AND CROSS SECTION. ALL JOINTS WHICH CONTAIN PREFORMED FILLER ARE TO BE CONSTRUCTED BEFORE THE FINAL FLOATING AND SURFACE FINISHING OF THE CONCRETE, UNLESS OTHERWISE DIRECTED.
LONGITUDINAL JOINTS – IF THE CONTRACTOR ELECTS TO POUR THE ENTIRE WIDTH OF THE SLAB AT ONE TIME, CONSTRUCT THE LONGITUDINAL JOINT AS SHOWN. LONGITUDINAL JOINTS SHALL BE THE CONTACT TYPE OR WEAKENED PLANE TYPE AS SHOWN:
LONGITUDINAL CONTACT JOINTS – CONSTRUCT LONGITUDINAL CONTACT JOINTS WHEN CONCRETE IS PLACED AGAINST HARDENED CONCRETE REGARDLESS OF AGE, BETWEEN STRIPS OF PAVEMENT.
CONSTRUCTION JOINTS – CONSTRUCT CONSTRUCTION JOINTS WHEN THERE IS AN INTERRUPTION OF 20 MINUTES IN THE CONCRETE PLACING OPERATIONS. THE NEW CONCRETE PLACED AGAINST THE JOINT SHALL CONFORM CLOSELY TO THE PROPORTIONS AND CONSISTENCY OF THE PREVIOUSLY PLACED CONCRETE EXCEPT VIBRATE AND CONSOLIDATE IT TO A GREATER DEGREE AND WITH MORE CARE THAN NORMAL. UNLESS OTHERWISE SHOWN, DO NOT CONSTRUCT CONSTRUCTION JOINTS WITHIN 10 FEET OF A TRANSVERSE EXPANSION OR CONTRACTION JOINT. IF SUFFICIENT CONCRETE HAS NOT BEEN MIXED AT THE TIME OF INTERRUPTION TO FORM A SLAB AT LEAST 10 FEET LONG, REMOVE THE CONCRETE BACK TO THE LAST JOINT AND DISPOSE OF AS DIRECTED.

CONTRACTION JOINTS – CONSTRUCT ALL CONTRACTION JOINTS BY SAWING. CREATE CONTRACTION JOINTS AT INTERVALS SHOWN ON DRAWINGS.
REPLACEMENT OR PRICE REDUCTION – REMOVE CONCRETE REPRESENTED BY CYLINDERS THAT FAIL TO MEET THE MINIMUM STRENGTH REQUIREMENT AND REPLACE AT CONTRACTOR'S EXPENSE. IF THE ENGINEER DETERMINES THAT THE LOW-STRENGTH CONCRETE IS SUITABLE FOR THE PURPOSE INTENDED, THE CONTRACTOR MAY ACCEPT A PRICE REDUCTION ESTABLISHED BY THE ENGINEER INSTEAD OF REMOVAL AND REPLACEMENT.

SANITARY PIPE
MATERIALS – SANITARY PIPE IS TO BE DUCTILE IRON PIPE CLASS 52, CONFORMING TO ASTM A746. FURNISH CAPS OR PLUGS WITH EACH FITTING, OUTLET OR STUB AS REQUIRED, WITH THE SAME TYPE GASKET OR JOINT AS THE PIPE. EACH PIPE SHALL BE CLEARLY MARKED TO IDENTIFY ITS CLASS AND DATE OF MANUFACTURE. USE THE SAME MATERIAL FOR ALL PIPE AND FITTINGS FOR BOTH THE SEWER MAINLINE. PROVIDE TEE OR WYE FITTINGS IN THE SEWER MAIN FOR SERVICE LATERALS AND CATCH BASINS OR INLET CONNECTIONS. ALL FITTINGS SHALL BE OF SUFFICIENT STRENGTH TO WITHSTAND ALL HANDLING AND LOAD STRESSES ENCOUNTERED. MATERIAL JOINING THE FITTINGS TO THE PIPE SHALL BE FREE FROM CRACKS AND SHALL ADHERE TIGHTLY TO EACH JOINING SURFACE. CAP OR PLUG ALL FITTINGS THAT ARE TERMINAL ENDS OR FOR FUTURE USE AND PROVIDE WITH GASKETS OF THE SAME MATERIAL AS USED IN THE PIPE JOINT. FIT WITH AN APPROVED MECHANICAL STOPPER, OR INSTALL AN INTEGRALLY CAST KNOCKOUT PLUG. THE CAP OR PLUG SHALL BE CAPABLE OF WITHSTANDING TEST PRESSURES WITHOUT LEAKING AND, WHEN LATER REMOVED, SHALL PERMIT CONTINUATION OF PIPING WITH JOINTING SIMILAR TO JOINTS IN THE INSTALLED LINE.

GRADATION CRITERIA

ODOT #8 BEDDING

SIEVE SIZE	PERCENT PASSING
12.5mm(1/2")	100
9.5mm(3/8")	85 TO 100
4.75mm(No. 4)	10 TO 30
2.36mm(No. 8)	0 TO 10
1.16mm(No. 16)	0 TO 5

ODOT #57 BASE

SIEVE SIZE	PERCENT PASSING
37.5mm (1 1/2 IN)	100
25mm (1 IN)	95 TO 100
12.75mm (1/2 IN)	25 TO 60
4.75mm (No. 4)	0 TO 10
2.36mm (No. 8)	0 TO 5

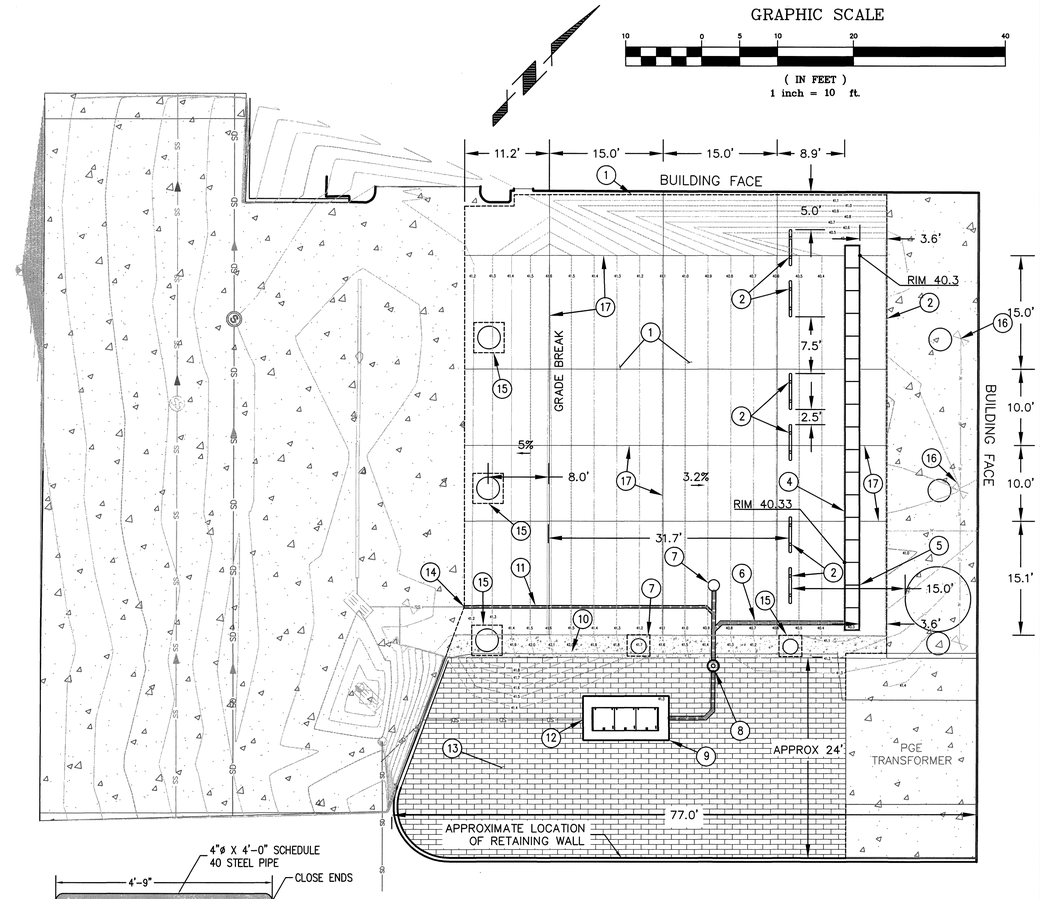

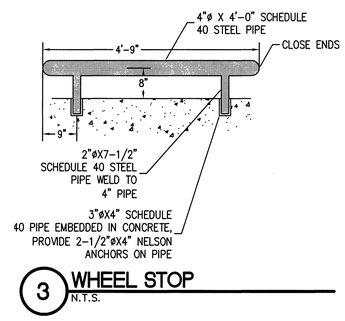

3 WHEEL STOP
N.T.S.

CONSTRUCTION KEYNOTES:

1. INSTALL 4000 PSI PORTLAND CEMENT CONCRETE, SEE DETAIL FOR SECTION (2/C4.0)
2. INSTALL WHEEL STOP PER DETAIL (3/C3.0)
3. 8"± STEP IN CONCRETE, ROUND OFF SAWCUT EDGE
4. INSTALL 51 LF CAST-IN-PLACE TRENCH DRAIN W/ COVERED GRATING (1/C4.0) (6/C4.0)
5. CONNECT SUMP TO TRENCH DRAIN IE: 39.1 (5/C4.0)
6. INSTALL 17 LF 6" DI, S = 0.01, SEE DETAIL FOR TRENCH BACKFILL (2/C2.0)
7. INSTALL CLEANOUT RIM: 40.90, 6" IE: 38.19 (1/C3.0)
8. INSTALL EMERGENCY FUEL SPILL SHUTOFF, 6" FNW STAINLESS STEEL METAL SEATED KNIFE GATE VALVE OR EQUAL
9. INSTALL 2100 GALLON OIL/WATER SEPARATOR W/ TWO 6" RISER FOR LID (2/C3.0)
10. INSTALL 61 LF OF STANDARD SIDEWALK (4/C3.0)
11. INSTALL 33 LF 6" DI, S = 0.01, SEE DETAIL FOR TRENCH BACKFILL (2/C2.0)
12. CONNECT TO EXISTING 6" SANITARY LINE, EXISTING IE OUT 38.2
13. REMOVE EXISTING VEGETATION AND INSTALL PERMEABLE PAVERS (4/C3.0)
14. CONNECT TO EXISTING SANITARY DRAIN USING FERNCO COUPLINGS
15. EXPANSION JOINTS
16. REPLACE 1-1/2" BALL VALVE WITH FNW 401 COPPER SIDED BALL VALVE OR EQUAL. INSTALL 1-1/2" COPPER WYE IN FRONT OF BALL VALVES.
17. CONTRACTION JOINT

CONTRACTOR IS RESPONSIBLE FOR ALL MATERIAL REQUIRED AND MUST VERITY ALL DIMENSIONS, THE DIMENSIONS PROVIDED HERE ARE ESTIMATES ONLY

5106-3-332P

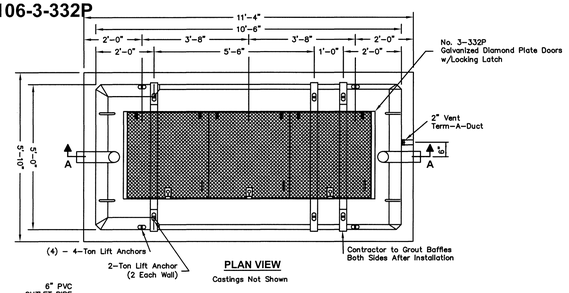

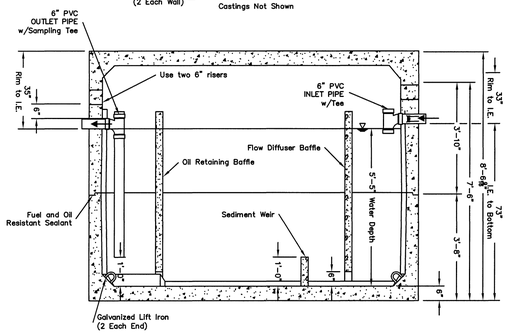

SECTION AA

Scale: 3/8" = 1'-0"

Notes:
1. Baffles and Weir to be Precast Concrete
2. Contractor to:
Set & Grout Baffles & Weir Walls.
Fill with Clean Water After Backfilling is Complete and Prior to "Start-Up" of System.

For Custom Applications the Following Information is Needed:
- Top of Separator Elevation
- Inlet and Outlet Pipe Sizes and Elevations

Oldcastle Precast® Utility Vault	5106-2-SA	5106-2-SA OIL / WATER SEPARATOR 2100 GALLON - API STYLE
PO Box 323, Wilsonville, Oregon 97070-0323 Tel: (503) 682-2844 Fax: (503) 682-2657	File Name: 020ECO5106SA22 Issue Date: 2008 www.uvwilsonville.com	

107.1

2 OIL / WATER SEPARATOR
N.T.S.

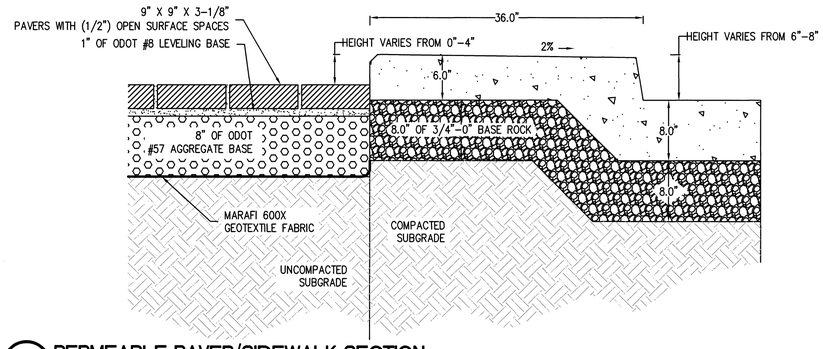

4 PERMEABLE PAVER/SIDEWALK SECTION
N.T.S.

REGISTERED PROFESSIONAL ENGINEER 14662 OREGON DEC. 07 1989 DON CUSHING
RENEWAL DATE 12/31/09

cushing Civil Engineers
Don Cushing Associates
Civil Engineers
6650 SW Redwood Lane, Suite 235, Portland, OR 97224
(503) 620-7884 •Fax: (503) 620-2771 •www.cushing-engr.com

THIS DRAWING IS COPYRIGHTED AND IS THE SOLE PROPERTY OF THE OWNER. IT IS PRODUCED SOLELY FOR USE BY THE OWNER AND ITS AFFILIATES. REPRODUCTION OR USE OF THIS DRAWING AND/OR THE INFORMATION CONTAINED IN IT IS FORBIDDEN WITHOUT THE WRITTEN PERMISSION OF THE OWNER.

METRO CENTRAL STATION
TRUCK WASH
6161 NW 61ST AVENUE
PORTLAND, OR 97210

DATE	RELEASE
6/19/09	30% SUBMITTAL
8/25/09	70% SUBMITTAL
9/24/09	85% SUBMITTAL
11/10/09	90% SUBMITTAL
-	-
-	-
-	-
-	-
-	-
-	-
-	-
-	-
-	-

JOB NUMBER:	09-003
DRAWN BY:	AKS
CHECKED BY:	DC

SHEET TITLE
SITE PLAN

SHEET NUMBER
C3.0 OF 4

CLEANOUTS – USE MATERIALS CONFORMING TO THE DETAILS AS SHOWN. CONSTRUCTION – CONSTRUCT SANITARY SEWER, PIPE ACCORDING TO THE FOLLOWING: TRENCH WORK – EXCAVATE TRENCH, PREPARE BEDDING, PIPE ZONE MATERIAL AND TRENCH BACKFILL, AND DISPOSE OF EXCAVATED MATERIAL. GRADES ARE ESTABLISHED IN THE PLANS, DO NOT DEVIATE FROM THOSE GRADES 1/2 INCH FOR LINE AND 1/4 INCH FOR GRADE, PROVIDED SUCH VARIATION DOES NOT RESULT IN A LEVEL OR REVERSE SLOPING INVERT. MEASURE FOR GRADE AT THE PIPE INVERT. ESTABLISH LINE AND GRADE WITH AN APPROVED PIPE LASER, OR OTHER APPROVED METHOD. SUBMIT ALL OTHER ALTERNATE METHODS, OTHER THAN LASERS, FOR APPROVAL BEFORE BEGINNING WORK. LAY SEWER SERVICE LATERAL PIPE IN A STRAIGHT LINE AND AT A UNIFORM GRADE BETWEEN THE TEE OR WYE AND THE END STAKE. WHERE MINIMUM SLOPES ARE USED, LAY THE PIPE BY MEANS OF A BUILDER'S LEVEL OF GOOD QUALITY AND NOT LESS THAN 24 INCHES IN LENGTH.
PIPE DISTRIBUTION AND HANDLING – UNLOAD PIPE ONLY BY APPROVED MEANS. INSPECT THE PIPE AND FITTINGS PRIOR TO LOWERING INTO THE TRENCH TO ENSURE NO CRACKED, BROKEN OR OTHERWISE DEFECTIVE MATERIALS ARE USED. CLEAN THE ENDS OF THE PIPE THOROUGHLY, REMOVE FOREIGN MATTER AND DIRT FROM THE INSIDE OF THE PIPE, AND KEEP THE PIPE CLEAN DURING LAYING AND JOINING. DO NOT DISTRIBUTE MORE THAN ONE DAY'S SUPPLY OF MATERIAL IN ADVANCE OF PIPE LAYING UNLESS OTHERWISE APPROVED. DO NOT UNLOAD PIPE OF ANY SIZE BY DROPPING TO THE GROUND. DO NOT DROP OR DUMP PIPE INTO TRENCHES. LOWER PIPE INTO THE TRENCH IN SUCH A MANNER AS TO AVOID ANY PHYSICAL DAMAGE TO THE PIPE. REMOVE ALL DAMAGED PIPE FROM THE JOBSITE.

INSTALLATION OF SANITARY SEWER WYES – INSTALL TEES AND WYE FITTINGS AS SHOWN OR AS STAKED IN THE FIELD. PROVIDE A COMPACTED AGGREGATE BASE OF PIPE BEDDING MATERIAL UNDER ALL TEES, WYES AND LATERAL FITTINGS EXTENDING TO THE SPRINGLINE OF THE FITTINGS. THE MAXIMUM DEFLECTION PERMISSIBLE WITH ANY ONE FITTING, EXCEPT A SERVICE LATERAL TEE, SHALL NOT EXCEED 45°; ACCOMPLISH THE DEFLECTION WITH STANDARD BENDS. CONNECT A SERVICE LATERAL TO A MANHOLE OR STRUCTURE ONLY WHEN APPROVED. MAKE THE CONNECTION SO A STANDARD PIPE JOINT IS LOCATED NOT MORE THAN 18 INCHES FROM THE MANHOLE OR STRUCTURE.
PLACING AND JOINING PIPE – GENERAL – BEGIN PIPE LAYING AT THE DOWNSTREAM END OF THE PIPE LINE AND PROCEED UPGRADE WITH SPIGOT OR TONGUE ENDS POINTING IN THE DIRECTION OF FLOW. ASSEMBLE JOINTS IN ACCORDANCE WITH THE RECOMMENDATIONS OF THE MANUFACTURER FOR THE TYPE OF JOINT USED. THE TRENCH BOTTOM SHALL FORM A CONTINUOUS AND UNIFORM BEARING AND SUPPORT FOR THE PIPE AT EVERY POINT BETWEEN JOINTS. TAKE CARE TO PROPERLY ALIGN THE PIPE BEFORE JOINTS ARE FORCED ENTIRELY HOME. ALL PIPE JOINTS SHALL BE IN THE "HOME" POSITION, WHERE THE LEAST GAP (IF ANY) EXISTS WHEN THE PIPE COMPONENTS THAT ARE FITTED TOGETHER AS TIGHTLY AS THE APPROVED JOINT DESIGN PERMITS. AFTER INSTALLATION, PREVENT MOVEMENT FROM ANY CAUSE INCLUDING UPLIFT OR FLOATING. PREVENT EXCAVATED OR OTHER FOREIGN MATERIAL FROM GETTING INTO THE PIPE. PLUG OR CLOSE OFF PIPES THAT ARE STUBBED OFF FOR FUTURE CONNECTION. WHEN CUTTING OR MACHINING OF THE PIPE IS NECESSARY, USE ONLY THE TOOLS AND METHODS RECOMMENDED BY THE PIPE MANUFACTURER. ALL FIELD JOINTS SHALL: PROVIDE EQUAL OR GREATER STRENGTH THAN THE ADJOINING PIPE FIT CLOSE AND TIGHT PROVIDE A SMOOTH AND UNIFORM INTERIOR SURFACE SECURE AND HOLD ADJOINING SECTIONS TO EACH OTHER FASTEN SECURELY TO ADJOINING STRUCTURES AND SPECIAL SECTIONS FINISHING,
TESTING – AT ANY TIME, THE ENGINEER MAY REQUIRE A CALIBRATION CHECK OF THE TEST INSTRUMENTATION. ALL AIR USED SHALL PASS THROUGH A SINGLE CONTROL PANEL. ALL TEMPORARY PLUGS USED TO CLOSE THE SEWER FOR THE AIR TEST SHALL BE CAPABLE OF RESISTING THE APPLIED INTERNAL PRESSURE AND SECURELY BRACED. PLACE ALL AIR TESTING EQUIPMENT ABOVE GROUND AND ALLOW NO ONE TO ENTER A MANHOLE OR TRENCH WHERE A PLUGGED SEWER IS UNDER PRESSURE. RELEASE ALL PRESSURE BEFORE REMOVING THE PLUGS. THE TESTING EQUIPMENT SHALL INCLUDE A PRESSURE RELIEF DEVICE DESIGNED TO RELIEVE PRESSURE IN THE SEWER UNDER TEST AT 10 PSI OR LESS AND SHALL ALLOW CONTINUOUS MONITORING OF THE TEST PRESSURES IN ORDER TO AVOID EXCESSIVE PRESSURE. USE CARE TO AVOID THE FLOODING OF THE AIR INLET BY INFILTRATED GROUND WATER. IF POSSIBLE, INJECT THE AIR AT THE UPPER PLUG. USE ONLY QUALIFIED PERSONNEL TO CONDUCT THE TEST.
THE PRESSURE GAUGE USED IN AIR TESTING SHALL HAVE MINIMUM DIVISIONS OF 0.1 PSI AND AN ACCURACY OF 0.0625 PSI. ALL AIR TESTING SHALL BE BY THE TIME PRESSURE DROP METHOD. THE TEST PROCEDURE IS AS FOLLOWS:
(1) THE CONTRACTOR MAY WET THE LINES PRIOR TO TESTING. CLEAN THE SEWER TO BE TESTED; REMOVE ALL DEBRIS. PLUG ALL SEWER OUTLETS WITH SUITABLE TEMPORARY TEST PLUGS. BRACE EACH PLUG SECURELY. (2) DETERMINE THE AVERAGE HEIGHT OF THE GROUNDWATER OVER THE LINE. THE TEST PRESSURES REQUIRED SHALL BE INCREASED 0.433 PSI FOR EACH FOOT OF AVERAGE WATER DEPTH OVER THE EXTERIOR CROWN OF THE PIPE. (3) ADD AIR SLOWLY TO THE SECTION OF SYSTEM BEING TESTED UNTIL THE INTERNAL AIR PRESSURE IS RAISED TO 4 PSI GREATER THAN THE AVERAGE BACK PRESSURE DUE TO GROUNDWATER. (4) AFTER THE TEST PRESSURE IS REACHED, ALLOW AT LEAST TWO MINUTES FOR THE AIR TEMPERATURE TO STABILIZE, ADDING ONLY THE AMOUNT OF AIR REQUIRED TO MAINTAIN PRESSURE. (5) AFTER THE TEMPERATURE STABILIZATION PERIOD, DISCONNECT THE AIR SUPPLY. (6) RECORD THE TIME IN SECONDS THAT IS REQUIRED FOR THE INTERNAL AIR PRESSURE TO DROP FROM 3.5 TO 2.5 PSI GREATER THAN THE AVERAGE BACKPRESSURE DUE TO GROUNDWATER. THE TESTED SECTION WILL BE ACCEPTABLE IF THE TIME RECORDED IN (6) ABOVE IS NOT LESS THAN THE TIME IN SECONDS (T) COMPUTED BY THE FORMULA: $T = K/C$
WHERE: K = THE SUM OF THE COMPUTATIONS (0.011 D2L) FOR EACH SIZE OF PIPE AND ITS LENGTH IN THE SECTION C = THE SUM OF THE COMPUTATIONS (0.0003882 DL) FOR EACH SIZE OF PIPE AND ITS LENGTH IN THE SECTION, EXCEPT THAT THE MINIMUM VALUE FOR C SHALL BE 1 D = INSIDE DIAMETER OF THE PIPE IN INCHES L = LENGTH OF PIPE IN FEET IF THE SEWER FAILS TO MEET THESE REQUIREMENTS, DETERMINE THE REASON FOR LEAKAGE AND REPAIR OR REPLACE ALL DEFECTIVE MATERIALS OR WORKMANSHIP, ALL AT NO ADDITIONAL COST TO THE CITY.

UNIT PAVERS

PRODUCTS – PRODUCTION OF INTERLOCKING CONCRETE PAVING UNITS SHALL BE BY A MANUFACTURER THAT IS A MEMBER OF THE INTERLOCKING CONCRETE PAVEMENT INSTITUTE (ICPI) AND SF CONCRETE TECHNOLOGY, INC. THE MANUFACTURER MUST POSSESS A MINIMUM OF FIVE (5) YEARS EXPERIENCE IN THE FABRICATION OF CONCRETE PAVING UNITS.

ACCEPTABLE PERMEABLE INTERLOCKING CONCRETE PAVER UNITS: SF–RIMA. BY WILLAMETTE GREYSTONE. COLOR: GRAY. SIZE: 9 INCHES X 9 INCHES X 3–1/8 INCHES THICK
PRODUCT SUBSTITUTIONS
SUBSTITUTIONS PERMITTED WHEN PRE APPROVED BY ENGINEER.
ACCESSORIES
PROVIDE ACCESSORY MATERIALS AS FOLLOWS: GEOTEXTILE FABRIC: MARAFI 600X

EXECUTION – INSTALLATION OF INTERLOCKING CONCRETE PAVING UNITS SHALL BE BY A SPECIALTY CONTRACTOR AND CREW WITH AT LEAST THREE (3) YEARS EXPERIENCE IN PLACING INTERLOCKING CONCRETE PAVERS ON PROJECTS OF SIMILAR SCOPE. INSTALLER SHALL ALSO HOLD A CURRENT CERTIFICATE FROM THE INTERLOCKING CONCRETE PAVEMENT INSTITUTE CONCRETE PAVER INSTALLER CERTIFICATION PROGRAM. CONTRACTOR SHALL SUBMIT EVIDENCE OF INSTALLERS EXPERIENCE AND CERTIFICATION.

TOPSOIL EXCAVATION – EXCAVATE TOPSOIL TO REQUIRED SUB–BASE DEPTH AND REMOVE EXCAVATED TOPSOIL TO ONSITE DISPOSAL LOCATION. LEAVE SUBGRADE FIRM, SMOOTH AND UNIFORM.
EXAMINATION BEFORE INSTALLATION
VERIFY THAT SUBGRADE PREPARATION, COMPACTION AND ELEVATIONS CONFORM TO SPECIFIED REQUIREMENTS. VERIFY THAT GEOTEXTILES HAVE BEEN PLACED ACCORDING TO DRAWINGS AND SPECIFICATIONS. VERIFY THAT AGGREGATE BASE MATERIALS ARE PLACED TO CORRECT DEPTH AND SURFACE TOLERANCES AND ELEVATIONS CONFORM TO SPECIFIED REQUIREMENTS. VERIFY THAT BASE IS FREE FROM STANDING WATER, UNIFORM, EVEN, FREE OF ANY ORGANIC MATERIAL OR SEDIMENT, DEBRIS, READY TO ACCEPT BEDDING MATERIALS, PAVERS AND IMPOSED LOADS. DO NOT PROCEED WITH INSTALLATION OF BEDDING AND INTERLOCKING CONCRETE PAVERS UNTIL BASE CONDITIONS ARE CORRECTED.
INSTALLATION
OPEN–GRADED AGGREGATE BASE. KEEP AREA WHERE PAVEMENT IS TO BE CONSTRUCTED FREE FROM SEDIMENT DURING ENTIRE JOB. GEOTEXTILES, BASE AND BEDDING MATERIALS CONTAMINATED WITH SEDIMENT SHALL BE REMOVED AND REPLACED WITH CLEAN MATERIALS. PLACE GEOTEXTILE ON THE BOTTOM AND SIDES OF THE EXCAVATED AREA WITH A MINIMUM DOWNSLOPE OVERLAP OF 24 IN. PLACE AND SPREAD THE NO. 57 CRUSHED STONE BASE WITHOUT WRINKLING OR FOLDING THE GEOTEXTILE. DO NOT DAMAGE DRAINPIPES AND OTHER EXPOSED UNDERGROUND. MOISTEN, SPREAD AND COMPACT NO. 57 IN 4 TO 6 IN. LIFTS WITH A VIBRATORY ROLLER. FOR EACH LIFT, MAKE AT LEAST TWO PASSES IN THE VIBRATORY MODE THEN AT LEAST TWO IN THE STATIC MODE UNTIL THERE IS NO VISIBLE MOVEMENT OF THE NO. 57 STONE. THE ELEVATION OF THE FINAL SURFACE OF THE NO. 57 BASE SHOULD NOT DEVIATE MORE THAN +/– ½ IN. OVER A 10 FT. STRAIGHTEDGE.
BEDDING LAYER – MOISTEN, SPREAD AND COMPACT THE NO. 8 CRUSHED STONE BEDDING MATERIALS. COMPACT WITH A MINIMUM 10 TON STATIC ROLLER. MAKE AT LEAST 4 PASSES. NO VISIBLE MOVEMENT SHOULD OCCUR IN THE BASE MATERIAL WHEN COMPACTION IS COMPLETE. THE ELEVATION OF THE COMPACTED SURFACE SHOULD NOT DEVIATE MORE THAN +/– ½ IN. OVER A 10 FT. STRAIGHTEDGE. LAY THE PAVERS IN THE PATTERN(S) AND JOINT WIDTHS SHOWN ON THE DRAWINGS. MAINTAIN STRAIGHT PATTERN LINES. FILL GAPS AT THE EDGES OF THE PAVED AREA WITH CUT UNITS. CUT PAVERS TO BE PLACED ALONG THE EDGES WITH A DOUBLEBLADED SPLITTER OR MASONRY SAW. COMPACT AND SEAT THE PAVERS INTO THE BEDDING MATERIAL USING A LOW AMPLITUDE, 75–90 HZ PLATE COMPACTOR CAPABLE OF AT LEAST 5,000 LBS. CENTRIFUGAL COMPACTION FORCE. THIS WILL REQUIRE AT LEAST TWO OR THREE PASSES WITH THE COMPACTOR. DO NOT COMPACT WITHIN 6 FT. OF THE UNRESTRAINED EDGES OF THE PAVING UNITS. REMOVE EXCESS AGGREGATE BY SWEEPING PAVERS CLEAN. ALL PAVERS WITHIN 3 FT OF THE LAYING FACE MUST BE LEFT FULLY COMPACTED AT THE COMPLETION OF EACH DAY. THE FINAL SURFACE ELEVATIONS SHALL NOT DEVIATE MORE THAN +/– 3/8 IN. UNDER A 10 FT LONG STRAIGHTEDGE.
INSTALL PERMEABLE PAVER UNITS IN PATTERN DESIGNATED FOR WATER DRAINAGE WITH ½ IN. JOINT.
FIELD QUALITY CONTROL– AFTER SWEEPING THE SURFACE CLEAN, CHECK FINAL ELEVATIONS FOR CONFORMANCE TO THE DRAWINGS. LIPPAGE: NO GREATER THAN 1/8 IN. DIFFERENCE IN HEIGHT BETWEEN ADJACENT PAVERS.
PROTECTION – AFTER WORK IS COMPLETE, PROTECT WORK FROM DAMAGE UNTIL ACCEPTANCE

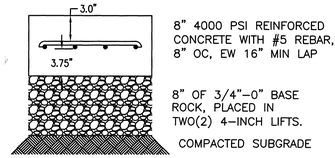

2 CONCRETE SECTION
N.T.S.

3 CONSTRUCTION JOINT
N.T.S.

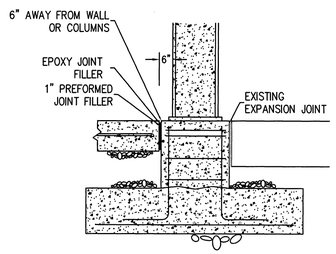

4 WALL EXPANSION JOINT
N.T.S.

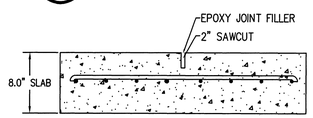

8 CONTRACTION JOINT
N.T.S.

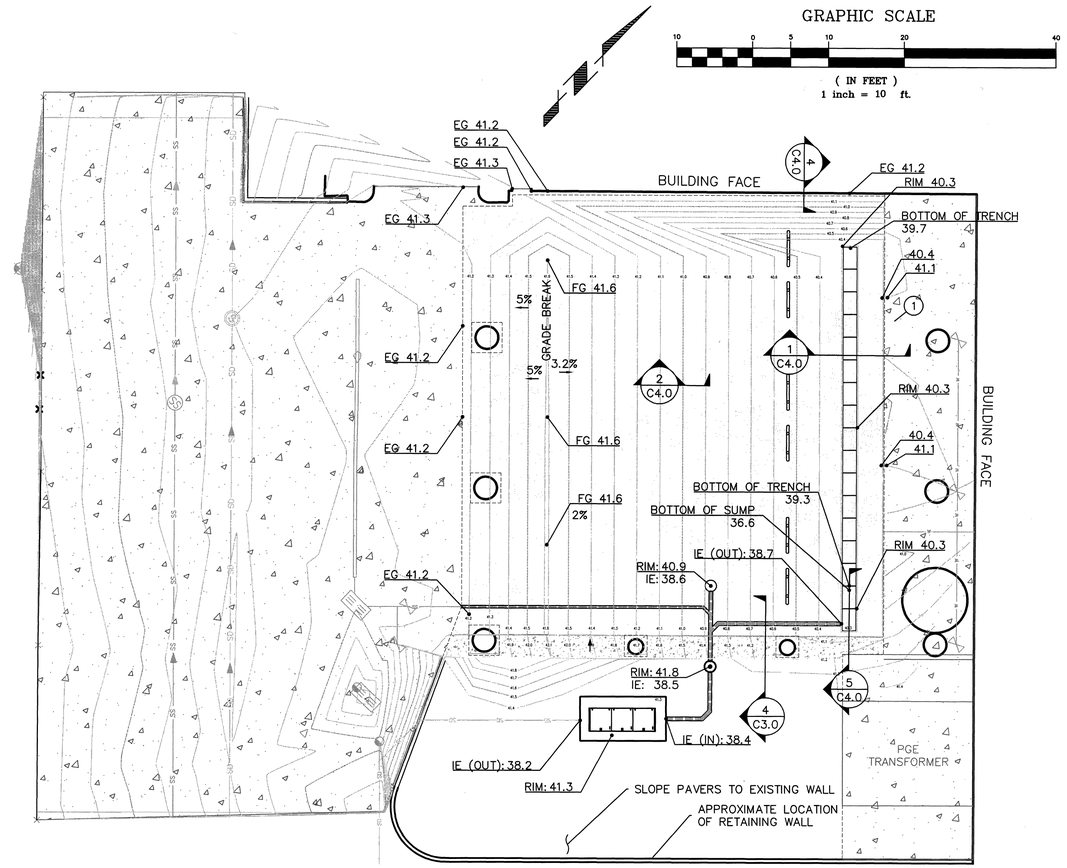

GRADING NOTES:

1. 8" STEP
2. SLOPE BOTTOM OF TRENCH DRAIN AT 1%

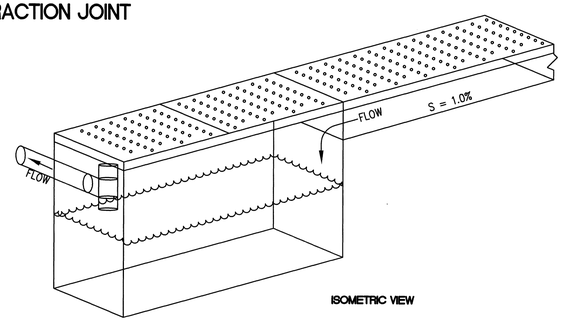

ISOMETRIC VIEW

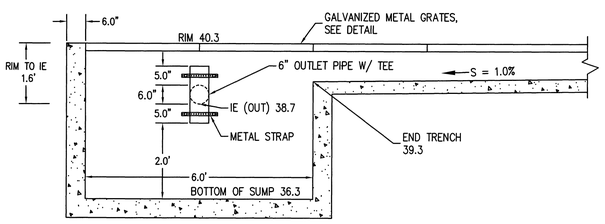

SIDE VIEW

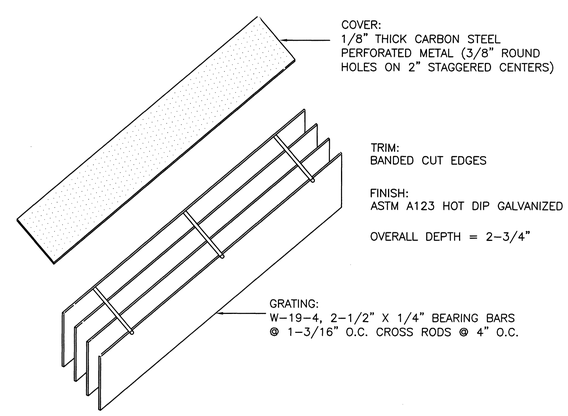

6 27' x 36' TRENCH DRAIN GRATE DETAIL
N.T.S.

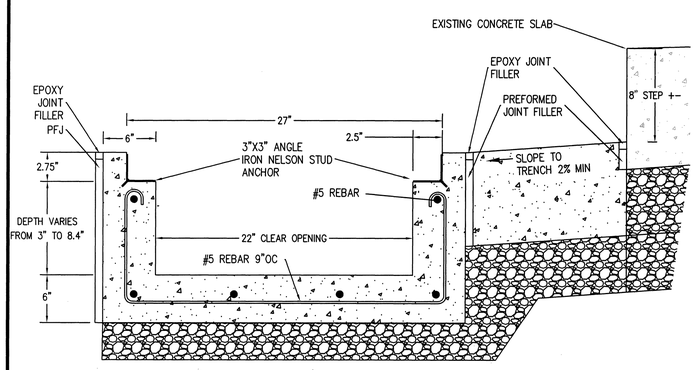

1 TRENCH DRAIN SECTION
N.T.S.

5 TRENCH DRAIN SUMP SECTION
N.T.S.

REGISTERED PROFESSIONAL ENGINEER 14662 OREGON DEC. 07, 1983 DON CUSHING
RENEWAL DATE 12/31/09

cushing CIVIL ENGINEERS
Don Cushing Associates
Civil Engineers
6650 SW Redwood Lane, Suite 235, Portland, OR 97224
(503) 620-7884 • Fax: (503) 620-2771 • www.cushing-engr.com

THIS DRAWING IS COPYRIGHTED AND IS THE SOLE PROPERTY OF THE OWNER. IT IS PRODUCED SOLELY FOR USE BY THE OWNER AND ITS AFFILIATES. REPRODUCTION OR USE OF THIS DRAWING AND/OR THE INFORMATION CONTAINED IN IT IS FORBIDDEN WITHOUT THE WRITTEN PERMISSION OF THE OWNER.

METRO CENTRAL STATION
TRUCK WASH
6161 NW 61ST AVENUE
PORTLAND, OR 97210

DATE	RELEASE
6/19/09	30% SUBMITTAL
8/25/09	70% SUBMITTAL
9/24/09	85% SUBMITTAL
11/10/09	90% SUBMITTAL
–	–
–	–
–	–
–	–
–	–
–	–
–	–
–	–
–	–

JOB NUMBER:	09–003
DRAWN BY:	AKS
CHECKED BY:	DC

SHEET TITLE
GRADING PLAN W/ DETAILS

SHEET NUMBER
C4.0 OF 4