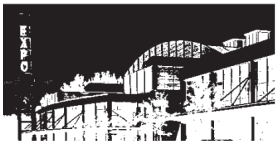

600 NE Grand Ave.
Portland, OR 97232
503-797-1780

www.oregon**metro.gov**

Metro | *Exposition Recreation Commission*

Agenda

Meeting:	Metro Exposition Recreation Commission Telephone Meeting
Date:	Wednesday, November 20, 2013
Time:	10:30-11:00 a.m.
Place:	By phone/Metro Regional Center, Room 301

CALL TO ORDER

10:30 1. QUORUM CONFIRMED

10:35 2. ACTION AGENDA

Resolution 13-30 For the purpose of selecting Todd Hess Building Company as the lowest responsive and responsible bidder in response to a Request for Bids, relating to the Oregon Convention Center (OCC) "Dragon Café Concessions Upgrades" and authorizing the General Manager to execute a contract with Todd Hess Building Company. **Scott Cruickshank**

ADJOURN

METROPOLITAN EXPOSITION RECREATION COMMISSION

RESOLUTION NO. 13-30

For the purpose of selecting Todd Hess Building Company as the lowest responsive and responsible bidder in response to a Request for Bids, relating to the Oregon Convention Center (OCC) "Dragon Café Concessions Upgrades" and authorizing the General Manager to execute a contract with Todd Hess Building Company.

WHEREAS, OCC intends to upgrade current Food and Beverage resources through capital improvements by remodeling and altering the Dragon Café to provide updated finishes as well as more efficient food service capacity; and

WHEREAS, Section 7(B) of the Metropolitan Exposition Recreation Commission's ("the Commission") Contracting and Purchasing Rules, requires competitive sealed bids under ORS Chapter 279C for public improvements such as this project; and

WHEREAS, MERC staff has evaluated the bids and Todd Hess Building Company is the lowest responsive and responsible bidder with a bid amount of two hundred, seventeen thousand, nine hundred eighteen & 00/100 ($217,918.00).

BE IT THEREFORE RESOLVED as follows:

1. The Commission selects Todd Hess Building Company as the lowest responsive and responsible bidder in response to the Request for Bids for the Oregon Convention Center – Dragon Café Concessions Upgrades

2. The Commission approves the contract with Todd Hess Building Company in the form substantially similar to the attached Exhibit A and authorizes the General Manager to execute the contract on behalf of the Commission.

Passed by the Commission on November 20, 2013

_____
Chair

_____
Secretary/Treasurer

Approved As to Form:
Alison R. Kean , Metro Attorney

By: _____
Nathan A. S. Sykes
Deputy Metro Attorney

MERC STAFF REPORT

Agenda Item/Issue: For the purpose of selecting Todd Hess Building Company as the lowest responsive and responsible bidder in response to a Request for Bids, relating to the Oregon Convention Center (OCC) "Dragon Café Concessions Upgrades" and authorizing the General Manager to execute a contract with Todd Hess Building Company.

Resolution No: **13-30**

Date: **November 20, 2013** **Presented by:** Scott Cruickshank

Background: During the November 6th Commission meeting, Brendan Coffey and I provided a brief overview of a remodel of the Dragon Café concession stand. This café has not been significantly upgraded in nearly 20 years and is in need of cosmetic and efficiency upgrades. In order to keep the food and beverage service program at the Oregon Convention Center effective, efficient and competitive while keeping up with the ongoing demands of the public, it has been determined that modifying the visual appeal and existing service format of the Dragon Café will provide a higher level of service to clients, as well as increase opportunity for product sales and is in the best interest of MERC and the public. This capital improvement will consist of remodeling the café with new flooring, cabinet finishes, stone wainscot, digital signage, food prep equipment, paint, and custom graphics that will compliment the recently renovated Portland Roasting Coffee stand. The remodel will also provide for a renewed keg beer delivery system as well as streamline the customer interaction process. This project is included in the 2013-2014 adopted budget as the "Dragon Café Cosmetic Upgrade Project". The funding as allocated in the budget was from the capital investment received as a part of the Aramark contract.

MERC Staff prepared and issued Bid Documents and a Request for Bids in accordance with MERC's Purchasing and Contracting Rules as well as Metro Policy and any and all state (ORS) requirements. On October 1, 2013, MERC Staff conducted a site walk for potential bidders in which 15 contractors attended. Five firms that attended the site walk were certified M/W/ESB contractors and one firm was from within the FOTA. On October 15, 2013, four bids were received and ranged from $214,918 to $254,000. Two of the bidders were certified ESB General Contractors, one of which was also a FOTA contractor. The lowest responsive and responsible bidder, Todd Hess Building Company, with a bid of $214,918.00 is not a certified M/W/ESB contractor but did include 15% dedicated M/W/ESB sub-contractor participation as a part of their bid.

The RFB requested pricing for an add alternate to include matching flooring in the seating area in exhibit hall C. This additional work has been accepted for a price of $3000.00 and has been included in the contract price.

Fiscal Impact: The FY 2013-14 adopted budget includes $200,000 in appropriation for the Dragon Café Cosmetic Upgrade and $71,274 in appropriation for Concession Upgrades to be determined during the year both are funded from the 2009 Aramark F&B Capital Investment. The total for this contract is $217,918, below the combined budget amount of $271,274.

Recommendation: Staff recommends that the Metropolitan Exposition Recreation Commission, by Resolution No. 13-30, approve the contract award and written contract (attached hereto) with Todd Hess Building Company, for the amount of Two Hundred, Seventeen Thousand Nine Hundred Eighteen & 00/100 dollars ($217,918.00).

Construction Agreement

Metro
600 NE Grand Ave.
Portland, OR 97232-2736
503-797-1700

MERC CONTRACT NO. 304013

THIS CONSTRUCTION AGREEMENT is between Metropolitan Exposition Recreation Commission, an appointed commission of Metro, located at 600 N.E. Grand Avenue, Portland, OR 97232-2736, referred to herein as “MERC” or “Metro,” and Todd Hess Building Supply Company, referred to herein as "Contractor," located at 9414 SW Barbur Blvd, Suite 150, Portland, OR 97219.

THE PARTIES AGREE AS FOLLOWS:

ARTICLE I
SCOPE OF WORK AND CONTRACT TERMS

CONTRACTOR shall perform the work and/or deliver to MERC the goods described in the Scope of Work attached hereto and incorporated herein as Attachment A. All services and goods shall be of good quality and otherwise in accordance with the Scope of Work. CONTRACTOR shall perform the work and/or deliver to MERC the goods described in the Scope of Work strictly in accord with the terms of this Construction Agreement and the General Conditions attached hereto and incorporated herein as Attachment B.

ARTICLE II
TERM OF CONTRACT

The term of this Contract shall be for the period commencing November 22, 2013 through and including February 28, 2014. Substantial completion per Section 9.4 of the General Conditions is January 21, 2014.

ARTICLE III
CONTRACT SUM AND TERMS OF PAYMENT

MERC shall pay the CONTRACTOR for work performed and/or goods supplied as described in the Scope of Work, in the maximum amount of TWO HUNDRED SEVENTEEN THOUSAND, NINE HUNDRED EIGHTEEN AND NO/100THS DOLLARS ($217,918.00) (the “Maximum Price”). MERC shall not be responsible for payment of any materials, expenses or costs other than those which are specifically included in the Scope of Work. The Maximum Price includes all fees, costs and expenses of whatever nature. Each of MERC's payments to Contractor shall equal the percentage of the work Contractor accomplished during the billing period. Contractor’s billing invoices shall include the MERC contract number, Contractor name, remittance address, invoice date, invoice number, invoice amount, tax amount (if applicable), and an itemized statement of work performed and expenses incurred during the billing period, and will not be submitted more frequently than once a month.

Contractor’s billing invoices shall be sent to Metro Accounts Payable, 600 NE Grand Avenue, Portland, OR 97232-2736 or metroaccountspayable@oregonmetro.gov. The MERC contract number shall be referenced in the email subject line. Contractor’s billing invoices for services through June 30 shall be submitted to Metro by July 15. Payment shall be made by MERC on a Net 30 day basis upon approval of CONTRACTOR invoice.

ARTICLE IV
BONDS

In addition, for public works subject to ORS 279C.800 to 279C.870, CONTRACTOR and every subcontractor shall have a public works bond required by 2005 Oregon Laws Chapter 360 filed with the Construction Contractors Board before starting work on the project, unless exempt under Section 2 of 2005 Oregon Laws Chapter 360.

ARTICLE V
PUBLIC CONTRACTS

All applicable provisions of ORS chapters 187 and 279A, 279B, and 279C and all other terms and conditions necessary to be inserted into public contracts in the State of Oregon, are hereby incorporated as if such provision were a part of this Agreement. Specifically, it is a condition of this contract that CONTRACTOR and all employers working under this Agreement are subject employers that will comply with ORS 656.017 as required by 1989 Oregon Laws, Chapter 684.

Metro
600 NE Grand Ave.
Portland, OR 97232-2736
503-797-1700

MERC CONTRACT NO. 304013

For public work subject to ORS 279C.800 to 279C.870, the CONTRACTOR shall pay prevailing wages. If such public work is subject both to ORS 279C.800 to 279C.870 and to 40 U.S.C. 276a, the CONTRACTOR and every subcontractor on such public work shall pay at least the higher prevailing wage. The CONTRACTOR and each subcontractor shall pay workers not less than the specified minimum hourly rate of wage in accordance with Section 7 of 2005 Oregon Laws Chapter 360. MERC shall pay an administrative fee as provided in ORS 279C.825(1) to the Bureau of Labor and Industries pursuant to the administrative rules established by the Commissioner of Labor and Industries. CONTRACTORS must promptly pay, as due, all persons supplying to such contractor labor or material used in this contract. If the CONTRACTOR or first-tier subcontractor fails, neglects, or refuses to make payment to a person furnishing labor or materials in connection with the public contract for a public improvement within 30 days after receipt of payment from the public contracting agency or a contractor, the CONTRACTOR or first-tier subcontractor shall owe the person the amount due plus shall pay interest in accordance with ORS 279C.515. If the CONTRACTOR or first-tier subcontractor fails, neglects, or refuses to make payment, to a person furnishing labor or materials in connection with the public contract, the person may file a complaint with the Construction Contractors Board, unless payment is subject to a good faith dispute as defined in ORS 279C.580. CONTRACTOR must pay any and all contributions and amounts due to the Industrial Accident Fund from contractor or subcontractor and incurred in the performance of the contract. No liens or claims are permitted to be filed against MERC on account of any labor or material furnished. CONTRACTORS are required to pay the Department of Revenue all sums withheld from employees pursuant to ORS 316.167.

For public improvement work all CONTRACTORS must demonstrate that an employee drug-testing program is in place.

ARTICLE VI
COUNTERPARTS

This Contract may be executed in counterparts or multiples, any one of which will have the full force of an original.

ARTICLE VII
DELIVERY OF NOTICES

Any notice, request, demand, instruction, or any other communications to be given to any party hereunder shall be in writing, sent by registered or certified mail or fax as follows:

To Contractor: Derek Jackson
Todd Hess Building Company
9141 SW Barbur Blvd, Suite 150
Portland, OR 97219
503-222-2670 fax

To Metro: Metro Procurement Services
600 NE Grand Ave
Portland, Oregon 97232
503-797-1791 fax

With Copy to: Josh Lipscomb
600 NE Grand Ave
Portland, OR 97232
503-797-1795 fax

CONTRACTOR

By_____

Print Name_____

Date_____

METROPOLITAN EXPOSITION RECREATION COMMISSION

By_____

Print Name_____

Date_____

ATTACHMENT A TO CONSTRUCTION AGREEMENT – SCOPE OF WORK

1. Purpose and Goal of Work

MERC is contracting for services to provide tenant improvements to a concessions area at the Oregon Convention Center located at 777 NE MLK JR Bld, Portland, OR 97232. The Oregon Convention Center (OCC) is remodeling the existing Dragon Café Concession area in the Pre-function C/ Exhibit Hall C area of the building.

2. Scope of Work

Description of Work

Scope of work will include (but not be limited to) construction services/work from the following trades: electrical, plumbing, drywall, painting, demolition, carpentry, flooring, and construction clean-up as defined below and as per Attachments C and D as referenced below. A more detailed scope of work and specifications are provided in Attachments C and D.

Clarifications

- Contractor to install the Owner provided displays and mounting brackets. All other equipment, labor and materials to complete the project per Attachments C and D, including beer taps, kitchen equipment etc, are to be provided by contractor.
- Contractor is to reuse existing POS System equipment.
- Alternate V-1 Flooring is included in this scope of work
- Contractor is to remove the existing signage at locations to be re-laminated.
- Awnings are to be constructed of steel as shown in Attachment D. *Disregard detail 13/ID 5.12 from Attachment C drawings.*
- MT-3 as specified in Attachment C to be 2-½" x ½". *(Not 2-½" x ¼") as stated on drawings.*
- Owner has the option to keep any items to be removed from the space
- **Contractor has access to worksite from November 18, 2013 through January 23, 2014 with the exception of an event on December 13th, and January 16 and 17. Liquidated Damages in the amount of $3,200 for 1/24, $6,400 for 1/25 and $4,000 for 1/26 shall be assessed if project is not substantially complete and usable by January 24, 2014.**

Contractor is to provide three (3) sets of As-Built drawings upon project completion. This "as built" documentation is to include, but is not limited to; all warranty information, all parts information, all specific parts ordering information and requirements including vendor name, part # and model #, any drawings and a list of vendor representatives and contact information. This documentation is a record of the final systems as installed and adjusted, after all final acceptance tests have been completed. System documentation includes a clearly outlined schedule for routine maintenance operations and safety checks.

Contractor is responsible for cleanliness of work areas and should plan to pick up debris created during construction. Contractor is responsible for protection of work area from pedestrian traffic. Contractor is responsible for cover up and protection of existing equipment and building. Contractor is to maintain a worksite free of hazardous work conditions and construction debris. Dust control is the responsibility of the Contractor.

Contractor shall not interfere with scheduled events or prohibit any tenants or clients from accessing other spaces in the building. Loud noise can be an issue in the facility; therefore any work that may be louder than a hand drill or similar will need to be coordinated with the Oregon Convention Center (OCC), so as to not disturb events/clients. Although work is expected to be in areas without impact on events, work will need to be done around building schedule. Schedule will need to be coordinated with OCC project manager. Contractor shall work with OCC provided schedule. This project may require Contractor to work "off hours" in order to complete the project in a timely manner as agreed upon with OCC. Contractor must coordinate work with building staff so as not to disrupt events in facility, which may include nights or weekend work.

Metro
600 NE Grand Ave.
Portland, OR 97232-2736
503-797-1700

MERC CONTRACT NO. 304013

To support the OCC's sustainability goals, materials being removed from the worksite shall be recycled and receipts provided to the MERC project manager. If recycling is not possible, then approval must be obtained from the MERC project manager for disposal. It is important to MERC to track our waste, reuse and recycling. Contractor shall provide diversion statistics to the Project Manager for all materials taken from the site.

The Scope of Work includes the Plan Set, Specifications, any Addenda attached hereto, and any Change Orders entered into in accord with the terms of the Contract;

ATTACHMENT C: Bargreen-Ellingson Plan Set titled "Oregon Convention Center Dragon Café Remodel, dated February 2, 2013;

ATTACHMENT D: Grummel Engineering Structural Specifications titled "Structural Calculations for Interior Canopy – Dragon Café Canopy – Oregon Convention Center, dated September 17, 2013;

Any modifications of any of the foregoing in the form of Addenda or Change Orders entered into in accordance with the terms of the Contract. Where applicable, reference to this Contract herein shall be deemed to refer to all of the Contract Documents.

Contractor shall provide all labor, tools, equipment, machinery, supervision, transportation and every other item and service necessary to perform the Work described in the Contract Documents. Contractor shall fully comply with each and every term, condition and provision of the Contract Documents.

Metro
600 NE Grand Ave.
Portland, OR 97232-2736
503-797-1700

MERC CONTRACT NO. 304013

Attachment B - SECTION 007200
METRO GENERAL CONDITIONS

TABLE OF CONTENTS

ARTICLE 1 GENERAL PROVISIONS 8-13
1.1 DEFINITIONS
1.2 INTERPRETATION AND USE OF CONTRACT DOCUMENTS.
1.3 SUPPLY OF CONTRACT DOCUMENTS.
1.4 USE OF CONTRACT DOCUMENTS.
1.5 COPYRIGHT.
1.6 CONTRACTOR'S STATUS AS INDEPENDENT CONTRACTOR.
1.7 NO THIRD-PARTY BENEFICIARY TO THE CONTRACT.
1.8 SEVERABILITY CLAUSE.
1.9 NOTICE OR SERVICE.
ARTICLE 2 CONTRACTOR 13-17
2.1 RESPONSIBILITIES OF THE CONTRACTOR.
2.2 DOCUMENTS.
2.3 CONTRACTOR'S AUTHORIZED REPRESENTATIVE.
2.4 ON-SITE REPRESENTATION REQUIRED.
2.5 CONTRACTOR'S OFFICE AT THE SITE.
2.6 USE OF THE SITE BY CONTRACTOR.
2.7 REVIEW OF PROJECT CONDITIONS.
2.8 CONSTRUCTION STAKING.
2.9 CONSTRUCTION STAGING AREA.
2.10 KEY PERSONNEL.
2.11 CONTRACTOR'S EMPLOYEES AND SUBCONTRACTORS.
2.12 CONTRACTOR TO SUPPLY SUFFICIENT MATERIAL AND WORKERS.
2.13 CONSTRUCTION PLANT, EQUIPMENT, AND METHODS.
2.14 PERMITS.
2.15 CONTRACTOR'S TEMPORARY STRUCTURES.
2.16 COMPLIANCE WITH PRODUCT MANUFACTURER'S RECOMMENDATIONS.
2.17 ACCOUNTING RECORDS
ARTICLE 3 ADMINISTRATION OF THE CONTRACT 17-22
3.1 AUTHORITY AND RELATIONSHIPS OF METRO AND ARCHITECT.
3.2 AUTHORITY OF METRO.
3.3 REQUEST FOR INFORMATION.
3.4 CONTRACTOR'S CLAIMS.
3.5 METRO'S RIGHT TO STOP, PERFORM, OR DELETE WORK.
3.6 METRO'S RIGHT TO ADJUST PAYMENTS.
3.7 MEDIATION.
3.8 LITIGATION.
3.9 WORK TO CONTINUE NOTWITHSTANDING DISPUTE.
ARTICLE 4 SUBCONTRACTING AND ASSIGNMENT OF THE CONTRACT 22-23
4.1 SUBCONTRACTING.
4.2 OBJECTION TO SUBCONTRACTORS OR SUPPLIERS.
4.3 SUBSTITUTION, CHANGE, OR ADDITION OF SUBCONTRACTORS OR SUPPLIERS.
4.4 REMOVAL OF SUBCONTRACTORS AT REQUEST OF METRO.
4.5 METRO NOT OBLIGATED TO DETECT UNSATISFACTORY WORK.
4.6 NO CONTRACTUAL RELATIONSHIPS BETWEEN METRO AND CONTRACTOR'S SUBCONTRACTORS AND SUPPLIERS.
4.7 CONTRACTOR'S AGREEMENTS WITH SUBCONTRACTORS.
4.8 ASSIGNMENT.
ARTICLE 5 TIME OF COMPLETION AND SCHEDULE FOR THE WORK 23-24
5.1 PROSECUTION OF WORK GENERALLY.
5.2 TIME OF COMPLETION.

5.3 EXTENSIONS OF TIME.
5.4 PROJECT SCHEDULING.
5.5 USE OF COMPLETED PARTS OF THE WORK BEFORE ACCEPTANCE.
ARTICLE 6 COORDINATION WITH OTHER METRO CONTRACTORS 24-26
6.1 OTHER METRO CONTRACTORS GENERALLY.
6.2 DUTY TO INSPECT OTHER METRO CONTRACTORS' WORK.
6.3 LATENT DEFECTS IN OTHER CONTRACTOR'S WORK.
6.4 DUTY TO MAINTAIN SCHEDULE.
6.5 FAILURE TO MAINTAIN SCHEDULE.
6.6 FAILURE TO COORDINATE WORK.
6.7 OTHER METRO CONTRACTORS' FAILURE TO COORDINATE.
6.8 CONFLICTS AMONG CONTRACTORS.
6.9 COORDINATION DRAWINGS.
6.10 FURNISHED BY OWNER, INSTALLED BY CONTRACTOR ("FOIC") ITEMS.
6.11 CONFERENCES.
ARTICLE 7 CONTROL AND QUALITY OF WORK AND MATERIAL 26-30
7.1 QUALITY CONTROL.
7.2 INSPECTION.
7.3 UNSATISFACTORY MATERIALS AND WORKMANSHIP.
7.4 GENERAL WARRANTY OF CONTRACTOR.
7.5 THIRD-PARTY WARRANTIES.
7.6 SUBCONTRACTOR WARRANTIES.
7.7 CORRECTION OF WORK BY CONTRACTOR.
7.8 WARRANTY AND CORRECTION AGREEMENTS BY SUBCONTRACTORS.
7.9 REMEDIES NOT EXCLUSIVE.
7.10 PROOF OF COMPLIANCE WITH CONTRACT PROVISIONS.
7.11 PATENTS, COPYRIGHTS, TRADEMARKS.
7.12 ANTI-TRUST CLAIMS.
ARTICLE 8 CHANGES IN THE WORK 30-33
8.1 CHANGE ORDERS GENERALLY.
8.2 PROCEDURE FOR DETERMINING IMPACT OF CHANGE ORDERS ON CONTRACT AMOUNT.
8.3 LIMITATIONS WHEN CHANGE ORDERS IMPACT CONTRACT AMOUNT.
8.4 FORCE ACCOUNT WORK.
8.5 CONTRACTOR PROPOSALS FOR CHANGES IN WORK.
8.6 IMPACT OF AUTHORIZED CHANGES IN THE CONTRACT.
ARTICLE 9 PAYMENTS AND COMPLETION 33-36
9.1 SCOPE OF PAYMENT.
9.2 SCHEDULE OF VALUES.
9.3 PROGRESS PAYMENT PROCEDURE.
9.4 SUBSTANTIAL COMPLETION.
9.5 FINAL COMPLETION AND ACCEPTANCE.
9.6 CLOSEOUT SUBMITTALS.
9.7 RELEASES.
9.8 FINAL PAYMENT.
9.9 NO WAIVER OF RIGHTS.
ARTICLE 10 SAFETY, USE OF SITE, AND PROTECTION OF THE WORK 36-42
10.1 LAWS AND REGULATIONS.
10.2 SAFETY REQUIREMENTS.
10.3 FIRST AID.
10.4 USE OF SITE.
10.5 PROTECTION OF WORK, PERSONS, AND PROPERTY AGAINST DAMAGE.
10.6 UTILITIES.
10.7 HAZARDOUS SUBSTANCES ENCOUNTERED DURING CONSTRUCTION AND OTHER ENVIRONMENTAL LAWS.
10.8 ADDITIONAL REQUIREMENTS FOR WORK.
ARTICLE 11 INDEMNIFICATION 42
11.1 INDEMNIFICATION.

Metro
600 NE Grand Ave.
Portland, OR 97232-2736
503-797-1700

ARTICLE 12 INSURANCE 42-45
12.1 GENERAL INSURANCE REQUIREMENT
12.2 REQUIRED COVERAGE
12.3 LIMITS
12.4 ADDITIONAL INSUREDS
12.5 JOINT VENTURE
12.6 PRIMARY COVERAGE
12.7 CONTRACTOR'S FAILURE TO MAINTAIN INSURANCE
12.8 CERTIFICATES OF INSURANCE
12.9 SUBCONTRACTOR INSURANCE
12.10 LIMITATIONS ON COVERAGE
12.11 PROPERTY INSURANCE
ARTICLE 13 MINORITY/WOMEN/EMERGING SMALL BUSINESS PROGRAM 45-46
ARTICLE 14 MISCELLANEOUS STATUTORY RESPONSIBILITIES OF THE CONTRACTOR 46
ARTICLE 15 TERMINATION OR SUSPENSION OF THE WORK 46-48
15.1 DEFAULT OF CONTRACTOR.
15.2 TERMINATION IN THE PUBLIC INTEREST.
EXHIBIT 1 WARRANTY FORM
EXHIBIT 2 SUBCONTRACTOR ASSIGNMENT OF ANTITRUST CLAIMS
EXHIBIT 3 AFFIDAVIT, AGREEMENT FOR INDEMNITY, LIEN WAIVER AND RELEASE (PROGRESS PAYMENT)
EXHIBIT 4 AFFIDAVIT, AGREEMENT FOR INDEMNITY, LIEN WAIVER AND RELEASE (FINAL CLOSEOUT)
EXHIBIT 5 AFFIDAVIT, LIEN WAIVER AND RELEASE – CONDITIONAL FINAL (SUBCONTRACTOR CLOSEOUT)

Metro
600 NE Grand Ave.
Portland, OR 97232-2736
503-797-1700

MERC CONTRACT NO. 304013

METRO GENERAL CONDITIONS

ARTICLE 1
GENERAL PROVISIONS

1.1 Definitions. Unless otherwise defined or specified in the Contract Documents, the following terms shall have the meanings indicated:

1.1.1 Act of God: An earthquake, flood, typhoon, cyclone, or other natural phenomenon of catastrophic proportions or intensity.

1.1.2 Addendum: A document issued by Metro during the solicitation period clarifying, adding, deleting, or materially changing Metro's solicitation documents.

1.1.3 Alternate Bids: Portions of the Work for which a Bidder must submit a separate Bid amount. Alternate Bid items may or may not be awarded at Metro's discretion.

1.1.4 Architect: A person retained by Metro as its design professional for the Work and authorized to practice architecture in the State of Oregon. The term "Architect" refers to the Architect or the Architect's authorized representative.

1.1.5 "As-Builts" or Record Documents: Those drawings made, revised, or annotated by Contractor and approved by Metro during the performance of the Contract, fully illustrating how all elements of the Work were actually installed and completed.

1.1.6 Aspirational Target: Target of intended utilization of MBE, WBE, and ESB firms that a contractor has no contractual obligation to meet.

1.1.7 Authorized Representative: A person acting on behalf of another through expressly delegated authority as specified in these Contract Documents.

1.1.8 Bid. The written offer of a Bidder to perform the Work as defined in these Contract Documents submitted in compliance with Metro's Bid Documents and Public Contracting Rules.

1.1.9 Bidder: A person acting directly or through a duly and legally authorized representative who submits or intends to submit a Bid for the Work as described in these Contract Documents.

1.1.10 Bid Documents: Those documents upon which a Bidder bases its bid to Metro.

1.1.11 Business Day: Calendar day excluding Saturdays, Sundays, and legal holidays.

1.1.12 Bid Forms: Forms required by Metro to be submitted with a Bid.

1.1.13 City or County: The city or county in which the Work is located.

1.1.14 Change Order: A written document signed by Metro and Contractor stating their agreement upon all of the following:

1.1.14.1 The change in the Work;
1.1.14.2 The amount of any adjustment in the Contract Amount; and
1.1.14.3 The extent of any adjustment to the Contract Time.

1.1.15 Clarification: A written document consisting of supplementary details, instruction or information issued by Metro after the award of Contract that clarifies or supplements the Contract Documents and becomes a part of the Contract Documents. A Clarification may or may not affect the scope of Work.

1.1.16 Completion: See "Substantial Completion" and "Final Completion and Acceptance."

1.1.17 Construction Schedule or Schedule: The timeline described in Article 5.

1.1.18 Contract: The Contract Documents.

1.1.19 Contract Amount: The total amount shown in the Construction Agreement as modified by any Change Orders.

1.1.20 Contract Documents or Contract or Bidding Documents: All of the following documents: the Advertisement for Bids, the Invitation to Bid, the Instructions to Bidders, the Bid Forms, the Construction Agreement, the Performance Bond, the Labor and Materials Payment Bond, the General Conditions, the Supplementary Conditions, the Specifications, the drawings, the approved and updated Construction Schedule, and any modifications of any of the foregoing in the form of Addenda, Clarifications, Change Orders, or Force Account Work.

1.1.21 Contractor: The person having entered into this Contract with Metro and who is responsible for the complete performance of the Work contemplated by the Contract Documents and for the payment of all legal debts pertaining to the Work, including its officers, agents, employees, and representatives.

1.1.22 Contract Time: The amount of time stated in the Contract Documents for the performance of all or a specified portion of the Work, as modified by any Change Orders.

1.1.23 Critical Path Method or CPM: The critical path method of scheduling as understood and interpreted by standard industry practice.

1.1.24 Day: Calendar day including Saturdays, Sundays, and legal holidays.

1.1.25 Defective Work: Work that (a) is performed in an unsatisfactory, faulty, or deficient manner; (b) does not conform to the Contract Documents; (c) does not meet the requirements of any reference standard, test, or approval referred to or incorporated by the Contract Documents; or (d) has been damaged by anyone other than Metro prior to Acceptance of the Work, whether or not such Work is in Metro's possession or use.

1.1.26 Direct Costs: The costs of labor (including benefits), materials, and equipment incurred by the person performing the Work or part of the Work.

1.1.27 Drawings: The graphic and pictorial portions of the Contract Documents, wherever located and whenever issued, showing the design, location, and dimensions of the Work, generally including plans, elevations, sections, details, schedules, and diagrams.

1.1.28 Engineer: A person lawfully practicing engineering. The term “Engineer" refers to the Engineer or the Engineer's authorized representative.

1.1.29 Environmental Laws: Any applicable statute, law, ordinance, order, consent decree, judgment, permit, license, code provision, covenant deed, common law, treaty, convention, or other requirement pertaining to protection of the environment, health or safety, natural resources, conservation, wildlife, waste management, or disposal of hazardous substances or pollution, including but not limited to regulation of releases to air, land, water, and groundwater.

1.1.30 Equal, Approved, Approved Equal: The material or product to be supplied or installed is equal to or better than that specified in function, performance, reliability, quality, and general configuration and is approved by Architect. Equality in reference to the Project design requirements shall be determined by Architect prior to installation of any material or product in the Project. Where the term "or equal" is not used and a sole product is specified, the term "or equal" is implied.

1.1.31 Final Completion: Full performance of all of the Work and acceptance of the Project by Metro.

1.1.32 Final Payment: The balance of the Contract Amount to be paid to the Contractor upon Final Completion and Acceptance of the Work. “Final Payment” includes payment of any withheld Retainage less deductions permitted or required by the Contract.

1.1.33 Force Account Work: Work, ordered in writing by Metro, for which Contractor must report its actual costs in accordance with Section 8.4 of the General Conditions.

1.1.34 General Conditions: The Metro General Conditions of the Contract for Construction set forth in this document.

1.1.35 Hazardous Materials: Any substance defined or designated as being radioactive, infectious, hazardous, dangerous, or toxic by any federal, state, or local statute, regulation, or ordinance presently in effect or subsequently enacted. For purposes of Section 10.7, the term "introduce" means the physical placement or transportation of Hazardous Materials in or on the Project Site regardless of whether the Hazardous Material was specified, required, or otherwise addressed in the Contract Documents.

1.1.36 Landscape Architect: A person lawfully practicing landscape architecture. The term "Landscape Architect" refers to the Landscape Architect or the Landscape Architect's authorized representative.

1.1.37 LEED Certification: A Leadership in Energy and Design Certification issued by the United States Green Building Council (USGBS).

1.1.38 Lump Sum: A way of expressing the Contract Amount for the Work, or the price bid for a portion of the Work, stated as a single price for all labor, materials, supplies, incidental work, overhead, and profit.

1.1.39 Metro: A metropolitan service district organized under the laws of the State of Oregon and the Metro Charter.

1.1.40 Metro Chief Operating Officer or COO: The Chief Operating Officer of Metro.

1.1.41 Metro Council or Council: Metro’s elected governing body.

1.1.42 Minority Business Enterprise, Women Business Enterprise and Emerging Small Business ("MWESB"): A firm eligible to participate as a Minority Business Enterprise, Women Business Enterprise or Emerging Small Business (collectively referred to as "MWESB") because it meets the criteria as established by the Office of Minority Women and Emerging Small Business in the State of Oregon. A firm will no longer qualify as an MWESB on this Contract when it receives notification of decertification, denial of recertification, or notice of graduation by the certifying agency.

1.1.43 MWESB Program: Metro's program to provide maximum opportunities to Minority, Women-Owned and Emerging Small Business Enterprises in contracts, which is contained in Metro Code Section 2.04.100 to 2.04.190.

1.1.44 Notice to Proceed: The written notice given by Metro to the Contractor to proceed with all or part of the Work. The Notice to Proceed will also establish the date and time of a preconstruction conference.

1.1.45 Overhead: When applied to the cost of the Work, includes the following items, when reasonable and necessary for completion of the Work:

1.1.45.1 All on-site payroll costs, taxes, insurance, fringe benefits, and bonuses of same, for supervising, estimating, expediting, purchasing, drafting, and clerical/secretarial services where directly incurred in the performance of the Contract.

1.1.45.2 Small tools (less than $250 capital cost per item).

1.1.45.3 Contractor-owned equipment.

1.1.45.4 Equipment maintenance and repairs.

1.1.45.5 Temporary construction, utilities, and safety requirements.

1.1.45.6 Transportation of materials other than direct identifiable cost of specific deliveries, or as included in price of material.

1.1.45.7 Parking fees for workers (if applicable).

1.1.45.8 Permit fees paid by the Contractor pursuant to the Contract Documents.

1.1.45.9 Cost of reproduction.

1.1.45.10 Field office costs. Home or branch office overhead shall not be included, but shall be part of Contractor's profit and shall include but is not limited to the following:

1.1.45.10.1 Accounting functions of Contractor's home and branch office.

1.1.45.10.2 General expenses of Contractor's home and branch office.

1.1.45.10.3 Interest on capital.

1.1.45.10.4 Salaries of any home and branch office estimators and administration.

1.1.46 Owner: Metro.

1.1.47 Person: An individual, partnership, corporation, joint venture, limited liability corporation, joint stock company, or other legal entity.

1.1.48 Plans: Drawings.

1.1.49 Profit: That portion of Contractor's Bid price that is not Direct Costs or Overhead

1.1.50 Project: The Work described in the Contract Documents.

1.1.51 Project Manager: The Metro representative on the construction Site. The Project Manager will be an employee of Metro who will represent Metro to the extent of his authority as delegated by the Chief Operating Officer. For purposes of administering this Contract the term "Project Manager" will refer to the on-site Metro representative and to any duly appointed assistants who may be designated in writing. The Architect will be called upon as required by and at the direction of Metro for technical assistance and for interpretation of the Contract Documents.

1.1.52 Proposal: The written offer of a Proposer to perform the Work as defined in these Contract Documents submitted in compliance with Metro's Request for Proposals and Public Contracting Rules.

1.1.53 Proposal Documents: Those documents upon which a Proposer responds to a Request for Proposals.

1.1.54 Proposer: A person who responds or intends to respond to a Request for Proposals issued by Metro.

1.1.55 Provide: To furnish and install complete and in place and ready for operation and use.

1.1.56 Punch List: The list prepared by the Architect and/or Project Manager at the time of Substantial Completion that reflects Contractor's incomplete, nonconforming Work. Punch List items must be completed to the satisfaction of the Architect and Metro in order for the Project to reach Final Completion and Acceptance.

1.1.57 Reference Specifications: Bulletins, standards, rules, methods of analysis or testing, codes, and Specifications of other agencies, engineering societies, or industrial associations referred to in the Contract Documents that when included in the Contract Documents establish the basis by which specific portions of the Work are to be performed. All such references specified refer to the latest edition thereof, including any Amendments in effect and published at the time of advertising for Bids or of issuing the permit for the Project.

1.1.58 Release: When used in regard to environmental laws or regulations, "release" as defined in Oregon or federal law.

1.1.59 Request for Bid (RFB): A solicitation to perform Work where a Contract is awarded based on price.

1.1.60 Request for Information (RFI): A written request made by Contractor for additional information to clarify an ambiguity in the Contact Documents.

1.1.61 Request for Proposals ("RFP"): A solicitation to perform Work issued where a Contract is awarded based on factors other than or in addition to price.

1.1.62 Retainage or Retention: The difference between the amount earned by Contractor on the Contract and the amount paid on the Contract by Metro.

1.1.63 Schedule of Values: The detailed breakdown of a lump-sum contract amount as required in Section 9.2.

1.1.64 Separate Contract: A contract between Metro and a party other than Contractor for the construction or furnishing of a portion of the Project.

1.1.65 Shown, As Shown: Work shown on the drawings that is a part of the Contract Documents.

1.1.66 Site: The real property upon which the Project is located.

1.1.67 Solicitation Documents: An RFB.

1.1.68 Special Inspector: A representative of Metro, Architect, Engineer or Geotechnical Engineer with specialized knowledge applicable to the installation of certain elements of the Work.

1.1.69 Specifications: That portion of the Contract Documents consisting of the written requirements for materials, equipment, construction systems, standards, and workmanship for the Work, and performance of related services, including any Reference Specifications.

1.1.70 Subcontractor: A person that has a contract with Contractor to perform a portion of the Work at the Site.

1.1.71 Submittals: Includes shop drawings, samples, manufacturer's brochures, pamphlets, catalog cuts, color charts, or other descriptive data, clearly defining the article, material, equipment, or device proposed by Contractor for use in the Work. "Shop drawings" are the drawings and diagrams showing details of fabrication and erection that Contractor is required to submit to the Architect.

1.1.72 Substantial Completion: The stage in the progress of the Work, as determined by Metro, when the Work or designated portion thereof is sufficiently complete in accordance with the Contract Documents so that Metro can lawfully occupy or use the Work for its intended use.

1.1.73 Supplier: An individual, partnership, corporation or joint venture entering into an agreement with Metro or Contractor for furnishing a portion of the Work that requires no labor at the Site, other than common carriers.

1.1.74 Unit Price: The dollar amount to complete a particular portion of the Contract Work, as defined in the Bid and Supplementary Conditions, and includes all costs, including but not limited to equipment, labor, materials, incidentals, Overhead, and Profit for the portion of Work described.

1.1.75 Unusually Persistent Severe Weather: Exists in any period when daily rainfall exceeds 0.50 inch during a month when the monthly average rainfall exceeds the normal monthly average by over twenty-five percent (25%), or when average daytime temperatures at the Project are less than 32 degrees F and are accompanied by accumulations of ice or snow, continuing for a day or more in excess of the annual average number of consecutive days severe weather conditions persist for the part of the Metro region where the Project is located ("Annual Average"). The Annual Average shall be calculated for this purpose based on ten-year averages reported in the Local Climatological Data for Portland Oregon, available at the Portland Weather Service Office. Contractor shall incorporate said Annual Average number of consecutive days severe weather conditions exist into the Project schedule at Project inception.

1.1.76 Work: Unless the context requires otherwise, the construction and services required by the Contract Documents, whether completed or partially completed, and includes all other labor, materials, equipment, and services provided or to be provided by Contractor to fulfill Contractor's obligations. The Work may constitute all or a portion of the Project as the context requires.

1.2 Interpretation and Use of Contract Documents.

1.2.1 Intent and Effect of the Contract. The Contract Documents form the Contract for construction and represent an integrated agreement between the Parties. The Contract supersedes all prior negotiations, representations, or agreements between the Parties, either written or oral. The Contract Documents are complementary, and what is required by one shall be as binding as if required by all. The intent of the Contract Documents is to include all items necessary for the proper execution and completion of the Work. Unless otherwise stated in the Contract Documents, words describing materials or Work that have a well-known technical or trade meaning shall be construed in accordance with such meanings.

1.2.2 Modification of Contract Documents. The Contract Documents may only be modified by written Amendment or Change Order signed by both Parties.

1.2.3 Divisions and Headings. Titles and headings are for the convenience of organizing the Contract Documents and shall not control or limit the Contractor's obligations under the Contract.

1.2.4 Mandatory Nature of Specifications and Drawings. Mention in the Specifications or indication on the drawings of articles, materials, operations, sequence, or methods requires Contractor to furnish and install (i.e., provide) each article mentioned or indicated, of the quality or according to qualifications noted, to perform each operation called for, in the sequence called for, and to provide therefore all necessary labor, equipment, and incidentals. The determination of the type of operations and methods to be utilized in the performance of the Work shall be the responsibility of Contractor unless the Contract Documents prescribe a specific type of operation, sequence, or method, in which case Contractor shall comply with the prescribed operation, sequence, or method. Sentences in the imperative tense or command format in these Contract Documents shall be deemed to be directed to Contractor and to require Contractor to perform the services and/or provide the materials described.

1.2.5 Precedence of Contract Documents. All determination of the precedence of, or resolution of discrepancies in, the Contract Documents shall be made by Metro, but in general, precedence will be in accordance with the following list with the highest precedence item at the top:

1.2.5.1 Executed Construction Agreement.

1.2.5.2 Supplementary Conditions.

1.2.5.3 General Conditions, Advertisement for Bids, Instructions to Bidders, Invitation to Bid, Bid Forms, Performance Bond, and Labor and Materials Payment Bond.

1.2.5.4 Specifications.

1.2.5.5 Drawings.

1.2.5.6 Contractor's Proposal. Within each of the above documents, detailed information takes precedence over general information and words take precedence over numbers unless obviously incorrect.

Amendments, Addenda, Clarifications, and all Change Orders to the Contract Documents take the same order of precedence as the specific sections that they are amending.

1.2.6 Meaning of Miscellaneous Phrases. Unless the context requires otherwise, phrases in the Contract Documents shall be interpreted as follows:

1.2.6.1 Wherever the words "as directed," "as instructed," "as required," "as permitted," or words of like effect are used, it shall be understood that the direction, requirement, or permission of Metro is intended.

1.2.6.2 The words "sufficient," "necessary," "proper," and the like shall mean sufficient, necessary, or proper in the judgment of Metro.

1.2.6.3 The words "approved," "acceptable," "satisfactory," or words of like import, shall mean approved by, or acceptable to, or satisfactory to Metro.

1.2.7 Discrepancies, Errors and Omissions. The intent of the Contract Documents is to require Contractor to perform and provide every detail and item necessary for completion of the Project. The Contract Documents are not complete in every detail, however, and Contractor shall comply with their intent and meaning, taken as a whole, and shall not avail itself of any manifest errors or omissions to the detriment of the Work. Should any error, omission, discrepancy, or ambiguity appear in the Contract Documents, instructions, or Work done by others, Contractor shall immediately upon discovery submit a Request for Information to Metro pursuant to Section 3.3. If Contractor proceeds with any such Work without receiving a response to the Request for Information, Contractor shall be responsible for all resulting damage and defects, and shall perform any Work necessary to comply with the Request for Information at no cost to Metro. Any Work or material not indicated in the Contract Documents that is manifestly necessary for full and faithful performance of the Work in accordance with the intent of the Contract Documents shall be indicated by Contractor on the shop drawings and provided by Contractor to the same extent as if both indicated and specified. Any Work indicated on the drawings but not specified, or vice versa, shall be furnished in the manner specified above as though fully set forth in both. Work not particularly detailed, marked, or specified shall be the same as similar parts that are detailed, marked, or specified. In case of discrepancy or ambiguity in quantity or quality, the greater quantity or better quality as determined by Metro shall be provided at no extra cost to Metro.

1.2.8 Standards that Apply Where Detailed Specifications Are Not Furnished. Wherever in these Contract Documents or in any directions given by Metro pursuant to or supplementing these Contract Documents, it is provided that Contractor shall furnish materials or manufactured articles or shall do work for which no detailed Specifications are set forth, the materials or manufactured articles shall conform to the usual standards for first-class materials or articles of the kind required, with due consideration of the use to which they are to be put. Work for which no detailed drawings or Specifications are set forth herein shall conform to the usual standards for first-class work of

the kind required. Dimensions not expressly provided in the Contract Documents are to be computed, rather than determined by scale or rule.

1.3 Supply of Contract Documents. Metro shall supply Contractor, without charge, a maximum of ten (10) sets of Contract Documents. Contractor shall contact Metro for additional sets of documents for which Contractor shall be charged the cost of printing.

1.4 Use of Contract Documents. The Contract Documents were prepared for use in the construction of this Project only. No part of the Contract Documents shall be used for any other construction or for any other purpose except with the written consent of Metro. Any unauthorized use of the Contract Documents is at the sole responsibility of the user and such unauthorized use shall be deemed an activity in the performance of the Contract for purposes of Contractor's duty to indemnify under Article 11.

1.5 Copyright. All submittals, record documents, and any other products or documents produced by Contractor pursuant to this Contract are the property of Metro and it is agreed by the Parties hereto that such documents are works made for hire. Contractor does hereby convey, transfer, and grant to Metro all rights of reproduction and the copyright to all such documents.

1.6 Contractor's Status as Independent Contractor. It is understood and agreed that the relationship of Contractor to Owner shall be that of an independent contractor under ORS 670.600. The Contractor further agrees that Contractor, its officers, agents, and employees, any Subcontractor or Supplier of Contractor of any tier, or its officers, agents, or employees, are not officers, employees, or agents of Metro under the Oregon Tort Claims Act (ORS 30.260 through 30.300). Contractor and its officers, agents, employees, and its Subcontractors and Suppliers of any tier and their officers, agents, and employees will make no claim whatsoever against Metro for indemnification pursuant to ORS 30.260 to 30.300. Contractor agrees to hold Metro harmless and indemnify Metro from any such claims.

1.7 No Third-Party Beneficiary to the Contract. The Parties agree that the execution of the Contract is not intended to, nor does it, create any third-party beneficiary rights in any person.

1.8 Severability Clause. Should any provision of this Contract at any time be in conflict with any law, regulation, or ruling, or be legally unenforceable for any reason, then such provision shall continue in effect only to the extent that it remains valid. In the event that any provision of this Contract shall become legally unenforceable, in whole or in part, the remaining provisions of this Contract shall nevertheless remain in full force and effect.

1.9 Notice or Service. Any written notice required or allowed under the Contract shall be deemed to have been communicated to the other Party and service thereof shall be deemed to have been made if such notice is delivered in person to the individual, a member of the partnership or joint venture, or an officer of the corporation for whom it was intended, or if delivered at or sent by regular, registered, or certified mail to the last business address of the relevant person or Party known to the person or Party giving the notice, or to Contractor's Site office if the notice is directed to Contractor. Notice may be delivered by e-mail as long as a hard copy is mailed the same day to the relevant person by the methods noted above. The date or time of service for purposes of all notices required or allowed under the Contract shall be the date and/or time upon which the relevant document was mailed or delivered as above described. The address given in the Bid or Proposal by the Contractor is hereby designated as the legal business address of Contractor, but such address may be changed at any time by ten (10) days' prior notice in writing, delivered to Metro.

ARTICLE 2
CONTRACTOR

2.1 Responsibilities of the Contractor.

2.1.1 The Contractor will perform the Work as required by the Contract Documents, including but not limited to providing all labor, materials, equipment, tools, machines, and incidental work necessary for its performance. The Contractor will supervise and direct the Work using the Contractor's best skill and attention. Contractor is solely responsible for and will have control of all of the means and methods of construction. Contractor shall be responsible to Metro for the acts and omissions of the Contractor's employees, Subcontractors, and their agents and employees, and other persons or entities performing portions of the Work for or on behalf of the Contractor or any of its Subcontractors. Contractor shall perform or cause to be performed all labor, services, and Work of whatever nature and shall provide or cause to be provided all materials, equipment, tools, and other facilities of whatever nature necessary to complete the Work and shall otherwise cause the Work to be completed in accordance with the Contract Documents.

2.1.2 Until the Work is completed and accepted by Metro, the Contractor is responsible for any damage it causes to either permanent or temporary work, utilities, materials, plants, and equipment, all of which must be repaired to the satisfaction of the Project Manager at the Contractor's expense. Damage caused by vandals must

be covered by the Contractor's insurance. Damage to any portion of the Work that has been completed and accepted by Metro and that is open for public use is not the responsibility of the Contractor if caused by third persons, such as vandals.

2.1.3 It shall be the duty of Contractor to comply with all procedures established and/or implemented by Metro. In the event any such procedures are at variance with other provisions of these Documents, such procedures shall prevail.

2.2 Documents.

2.2.1 The Contractor will maintain at the Site for Metro one record As-Built copy of the drawings, plans, Specifications, Addenda, Change Orders, and other modifications, in good order and marked currently to record changes and selections made during construction, as well as one record copy of shop drawings that have been reviewed and are being used. These as-built documents shall incorporate all changes and substitutions to the Work, including without limitation changes or substitutions arising from Change Orders, construction change directives, and details clarified by requests for information, supplemental instructions, or approved shop drawings. The Contractor's as-built documentation shall be available to the Architect and Metro during the course of the Project.

2.2.2 The Contractor shall maintain all approved permit drawings in a manner that will make them accessible at the Project Site to governmental inspectors and other authorized agencies. All approved drawings shall be wrapped, marked, and delivered to Metro within 60 days of Substantial Completion.

2.2.3 The Contractor must continuously maintain at the Project Site all material safety data sheets, safety records, daily logs, and other Contract documentation necessary to immediately ascertain the safety of the Work and to establish compliance with life safety policies, hazardous materials requirements, and the Contract Documents.

2.2.4 The Contractor, with its Subcontractors, will prepare draft record Contract Documents showing all as-built conditions as required under this Section 2.2 and submit them to Metro for review. Based on Metro's review and comments, if any, and pursuant to Metro's close-out policies and procedures, Contractor will prepare and deliver to Metro within 60 days of Substantial Completion, final, accurate, and complete record Contract Documents, including without limitation record drawings and Specifications showing the exact "as-built" conditions of the Work.

2.3 Contractor's Authorized Representative. Prior to commencing any Work under this Contract, the Contractor shall appoint in writing an authorized representative or representatives. Such appointment shall include the name and title of each representative along with the extent to which each representative is authorized to represent, bind, and act for Contractor. The description of extent of representation shall include but not be limited to the maximum dollar value of Change Orders that the individual may authorize, whether the individual may respond to RFPs and for what maximum dollar amount, and whether the individual may submit a claim pursuant to Section 3.4.

2.4 On-Site Representation Required. Contractor shall at all times be represented at the Site by one or more of such authorized representatives who, cumulatively, shall have complete authority to represent, bind, and act for Contractor in all matters pertaining to or related to this Contract. In the event that Metro deems it reasonably necessary to take immediate actions at the Site pertaining or relating to this Contract and Contractor has failed to comply with this Section and is consequently not fully represented at the Site at such time, then Contractor shall be deemed to acquiesce in all actions so taken by Metro.

2.5 Contractor's Office at the Site. Prior to commencement of Work at the Site, Contractor shall establish a field office at the Site acceptable to the Project Manager. This office shall be located in a job trailer or temporary building. This office shall be the headquarters of Contractor's representatives authorized to receive notices, instructions, drawings, or other communications from the Project Manager on behalf of Metro or the Architect, and to act on Change Orders or other actions. Such notices, instructions, drawings, or other communications given to such a representative or delivered to Contractor's Site office in his/her absence shall be deemed to have been given to Contractor.

2.6 Use of the Site by Contractor. Contractor shall have complete and exclusive use of the premises for execution of the Work within the boundaries shown on the drawings. The Contractor’s use of the premises is limited only by Metro’s right to perform Work or to retain other contractors on portions of the Project. All construction activities, storage, staging, and Work shall be confined to the limits of Work, as per the drawings. Under no circumstances shall portions of the Site beyond the limits of Work be disturbed. The Contractor shall appropriately fence and maintain barriers to confine limits of Work to those areas indicated on the drawings. All driveways and entrances to the Site shall remain clear and available to Metro and emergency vehicles at all times. The Contractor shall not use these areas for parking or storage of materials. The Contractor shall schedule delivery of materials to minimize space and time requirements for storage of materials and equipment on Site. The Contractor shall keep roadway pavement clean, free of mud, rocks, debris associated with materials, and vehicles. The Contractor shall coordinate use of the premises under the direction of the Architect and Owner. The Contractor shall assume all responsibility for the

protection and safe keeping of the Site, structures, and products stored on the Site included in this Contract. At no cost to Metro, the Contractor shall move any stored products that interfere with operations of Metro or construction activities. The Contractor shall obtain and pay for the use of additional storage or Work areas needed for operations.

2.7 Review of Project Conditions. Prior to execution of the Contract, the Contractor will evaluate the conditions and limitations under which the Work is to be performed, including without limitation (i) the geographical and topographical location, condition, layout, and nature of the Project Site and surrounding areas; (ii) generally prevailing climatic conditions; (iii) anticipated labor supply and costs; (iv) availability and cost of materials, tools, and equipment; (vi) ease or difficulty of access to the Project Site by vehicles, equipment and workers; and (v) other similar issues. The Contractor shall be solely responsible for providing a safe place for the performance of the Work. Metro will not be required to make any adjustment to the Contract Time or the Contract Price in connection with any failure by the Contractor to have complied with the requirements of this Section.

2.8 Construction Staking. Contractor shall provide all necessary construction staking as to lines and grades shown on the drawings. Contractor shall protect and preserve all control points in their original position or be responsible for providing new control points established from Architect's original control points.

2.9 Construction Staging Area. Coordinate use of the Site with Owner prior to utilization of the area. Providing Site security, barriers, and other temporary protection is the responsibility of the Contractor. Limit all construction activities within the Work limits shown on the drawings. All areas disturbed in any way or during construction and not covered by roads, parking, or structures shall be rehabilitated to their pre-construction condition.

2.10 Key Personnel. Contractor shall submit, in writing, to Metro a list of the names, addresses, and telephone numbers of its key personnel who are to be contacted in case of emergencies on the job during non-working hours, including Saturdays, Sundays, and holidays, and all other key personnel as may be required.

2.11 Contractor's Employees and Subcontractors.

2.11.1 Contractor shall enforce strict discipline and good order among the Contractor's employees and other persons carrying out the Work. Contractor shall not permit employment of unfit persons or persons not properly skilled in tasks assigned to them. It is the Contractor's responsibility to hire all personnel for the proper and diligent performance of the Work, and the Contractor shall maintain labor peace for the duration of the Project. In the event of a labor dispute, the Contractor shall not be entitled to any increase in the Contract Sum.

2.11.2 Metro may notify the Contractor that it needs to exclude or remove from the Project Site any or all employees, agents, suppliers, or representatives of the Contractor or its Subcontractors who threaten the safety of others or who are disruptive to the Project or Metro's operations. The Contractor will supply replacement personnel promptly after receiving notice of exclusion or removal. Nothing in this Section requires the Contractor to take any particular employment or contract action with regard to an employee or Subcontractor.

2.11.3 Contractor shall give Metro, at its request at any time, full and correct information as to the number of workers employed in connection with each subdivision of the Work, the classification and rate of pay of each worker, the cost to Contractor of each class of materials, tools, and appliances used by it in the Work, and the amount of each class of materials used in each subdivision of the Work.

2.12 Contractor to Supply Sufficient Material and Workers. Contractor shall at all times keep on the premises sufficient material and employ sufficient supervision and workers to prosecute the Work at the rate necessary to substantially complete the Work within the time specified in the Contract and in accordance with the Construction Schedule. Contractor shall coordinate the Work of its Subcontractors so that information required by one will be provided by others involved in time for incorporation in the Work in proper sequence and without delay of any materials, devices, or provisions for future Work.

2.13 Construction Plant, Equipment, and Methods.

2.13.1 The construction plant and equipment provided by Contractor, and Contractor's methods and organization for handling the Work, shall be such as will secure a good quality of Work and rate of progress that will ensure the completion of the Work within the time specified, in accordance with the Construction Schedule, and without violating city, local, state, or federal environmental regulations during construction.

2.13.2 Contractor shall give Metro full information in advance as to Contractor's plans for carrying on any part of the Work. If at any time before the commencement or during the progress of the Work, any part of Contractor's plant or equipment, or any of Contractor's methods of executing the Work, appear to Metro to be inadequate to ensure the required quality, environmental protection, or rate of progress of the Work, Metro may order Contractor to increase or improve its facilities or methods, and Contractor shall promptly comply with such orders. Neither compliance with such orders nor failure of Metro to issue such orders shall relieve Contractor from the obligation or liability to secure the quality of Work and the rate of progress required by the Contract. Contractor shall

be responsible for overload of any part or parts of structures beyond their safe calculated carrying capacities and for release of pollutants into surrounding waters resulting from Contractor's activities on the Site.

2.13.3 Contractor shall provide temporary utilities pursuant to the Specifications and shall be responsible for the safety and adequacy of its plant, equipment, and methods.

2.14 Permits.

2.14.1 The Contractor, without additional expense to Metro, is responsible for obtaining and paying for any necessary fees, licenses, and Permits and for complying with any federal, state, and municipal laws, codes, and regulations applicable to the performance of the Work, unless expressly provided otherwise in other portions of the Contract Documents. Notwithstanding this Section, Metro will submit Contract Documents to the City of Portland and pay all plan check fees and building permit fees.

2.14.2 The Contractor understands that preliminary approval of Metro's plans and Specifications by regulatory agencies does not prohibit such agencies from requesting changes in order that the Work complies with the provisions of applicable codes, laws, and regulations. The Contractor agrees that a reasonable number of changes directed by regulatory inspectors is inherent in the nature of construction work and that its Bid includes the costs of making them. The Contractor will bear the expense of complying with the requirements of regulatory inspectors for a reasonable number of changes even if such requirements require different or additional Work than that originally contemplated by the Contract Documents.

2.15 Contractor's Temporary Structures. Contractor shall obtain all necessary permits for and shall erect and maintain at its own expense, and remove upon completion of the Work or as ordered by Metro, temporary structures, sheds, barriers, walks, hoisting equipment, scaffolds, etc., as are necessary for the Work pursuant to these Contract Documents. Contractor's temporary structures, equipment, stored materials, stored equipment, etc., shall be located so as not to interfere with the prosecution of the Work. If not so located, they shall be moved by Contractor, as directed by Metro, at no cost to Metro. Contractor's temporary structures, equipment, or materials that obstruct progress of any portion of the Work shall be removed or relocated by Contractor at Contractor's expense.

2.16 Compliance with Product Manufacturer’s Recommendations. Unless otherwise directed by the Architect, the Contractor shall perform all Work in accordance with the product manufacturer’s recommendations, Specifications, or directions for best results. No predatory step or installation procedure may be omitted unless specifically authorized by the Contract Documents or at the direction of the Architect. Conflicts among manufacturer’s directions or the Contract Documents shall be resolved by the Architect.

2.17 Accounting Records.

2.17.1 The Contractor and Subcontractors shall maintain all fiscal records relating to this Contract in accordance with generally accepted accounting principles. In addition, Consultant and sub-consultants shall maintain any other records necessary to clearly document:

2.17.1.1 The performance of the Contractor, including but not limited to Contractor compliance with Contract plans and Specifications, compliance with fair contracting and employment programs, compliance with Oregon law on the payment of wages and accelerated payment provisions, and compliance with any and all requirements imposed on Contractor or Subcontractor under the terms of the Contract or subcontract;

2.17.1.2 Any claims arising from or relating to the performance of Contractor or Subcontractor under this Contract;

2.17.1.3 Any cost and pricing data relating to the Contract; and

2.17.1.4 Payments made to all suppliers and sub-consultants.

2.17.1.5 The records described in this Section 2.17.1 are the Contract Records.

2.17.2 The Contractor and Subcontractors shall maintain the Contract Records for the longer period of (a) six years from the date of final completion of the Contract to which the Contract Records relate or (b) until the conclusion of any audit, controversy, or litigation arising out of or related to the Contract.

2.17.3 The Contractor and Subcontractors shall make Contract Records available to Metro and its authorized representatives, including but not limited to the staff of any Metro department and the staff of Metro’s Auditor, within the boundaries of the Metro region, at reasonable times and places regardless of whether litigation has been filed on any claims. If the Contract Records are not made available within the boundaries of Metro, the Contractor or Subcontractor agrees to bear all of the costs for Metro employees, and any necessary consultants hired by Metro, including but not limited to the costs of travel, per diem sums, salary, and any other expenses that Metro incurs in sending its employees or consultants to examine, audit, inspect, and copy those records. If Contractor elects to have such Contract Records outside these boundaries, the costs paid by Contractor to Metro for inspection, auditing, examining, and copying those records shall not be recoverable costs in any legal proceeding.

2.17.4 The Contractor and Subcontractors authorize and permit Metro and its authorized representatives, including but not limited to the staff of any Metro department and the staff of Metro Auditor, to inspect, examine, copy, and audit the books and records of Contractor or Subcontractor relating to this Contract, including tax returns, financial statements, other financial documents, and any documents that may be placed in escrow according to any Contract requirements. Metro shall keep any such documents confidential to the extent permitted by Oregon law.

2.17.5 The Contractor and Subcontractors agree to disclose the Contract Records requested by Metro and agree to the admission of such records as evidence in any proceeding between Metro and Contractor and Subcontractors, including but not limited to a court proceeding, arbitration, mediation, or other alternative dispute resolution process.

2.17.6 The Contractor and Subcontractors agree that in the event such Contract Records or any audit disclose that Metro is owed any sum of money or establish that any portion of any claim made against Metro is not warranted, Contractor and Subcontractors shall pay all costs incurred by Metro in conducting the audit and inspection. Such costs may be withheld from any sum that is due or that becomes due from Metro.

2.17.7 Failure of the Contractor or Subcontractors to keep or disclose Contract Records as required by this Contract or any solicitation document may result in debarment as a bidder or proposer for future Metro contracts as provided in ORS 279B.130 and Metro Code Section 2.04.070(c), or may result in a finding that the Contractor or Subcontractor is not a responsible bidder or proposer as provided in ORS 279B.110 and Metro Code Section 2.04.052.

ARTICLE 3
ADMINISTRATION OF THE CONTRACT

3.1 Authority and Relationships of Metro and Architect. Except as specifically provided in this Section, no individual other than the Metro Chief Operating Officer or the Project Manager, duly appointed as set forth below, shall have any authority to make representations, statements, or decisions of whatever nature binding Metro or Architect regarding any aspect of this Contract. Except as specifically provided in this Article, Contractor shall have no right to, and shall not rely on, any such representation, statement, or decision. Any reference to action by Metro in this Contract requires the written approval of the Metro Chief Operating Officer or the Project Manager designated in writing by the Metro Chief Operating Officer as having authority to act for Metro, but only to the extent that such authority is expressly delegated in writing.

3.2 Authority of Metro. The Work must be performed to the complete satisfaction of the Project Manager.

3.2.1 The decision of the Project Manager will be final, binding, and conclusive on the Contractor on all questions that arise regarding the quantity of materials and Work, the quality of materials and Work, the acceptability of materials furnished and Work performed, the acceptable rate of progress of the Work, the interpretation of the plans and Specifications, the measurement of all quantities, the acceptable fulfillment of the Contract on the part of the Contractor, and payments under the Contract.

3.2.2 Work will not be considered completed until it has passed final inspection by the Project Manager and is accepted by Metro. The authority of the Project Manager is such that the Contractor must at all times carry out and fulfill the instructions and directions of the Project Manager insofar as they concern the Work to be done under the Contract.

3.2.3 If the Contractor fails to comply with any reasonable order made under the provisions of this Section, the Project Manager may cause unacceptable Work to be remedied or removed and replaced, and unauthorized Work to be removed, and to deduct the costs thereof from any money due or to become due to the Contractor.

3.2.4 The Project Manager has the authority to suspend Work for cause as set forth in Section 3.5.

3.2.5 Metro may call for meetings of Contractor, Contractor's Subcontractors, and Suppliers as Metro deems necessary for the proper supervision and inspection of the Work. Such meetings shall be held at the Site on regular working days during regular working hours, unless otherwise directed by Metro. Attendance shall be mandatory for all Parties notified to attend.

3.2.6 Nothing in this Section or elsewhere in the Contract is to be construed as requiring the Project Manager to direct or advise the Contractor on the method or manner of performing any Work under the Contract. No approval or advice as to the method or manner of performing or producing any materials to be furnished constitutes a representation or warranty by Metro that the result of such method or manner will conform to the Contract, relieve the

Contractor of any of the risks or obligations under the Contract, or create any liability to Metro because of such approval or advice.

3.2.7 An Architect, Engineer, designer, or other person hired by Metro under a separate contract is not the Project Manager, unless the Contract Documents expressly state otherwise. The Contractor will be notified in writing if the Project Manager is to be changed.

3.2.8 Contractor has no right to and shall not rely on representations of whatever nature made by any individual, whether or not employed by or purporting to represent Metro, unless such individual has been specifically and expressly delegated authority to make such representations pursuant to these Contract Documents. Likewise, Contractor has no right to and shall not rely on any representations of authorized changes in the Contract of whatever size or nature unless such change is in writing and signed by Metro.

3.2.9 Nothing contained in this Section shall obligate Metro or Architect to supervise Contractor's Work under this Contract, and Contractor shall remain fully responsible for the complete and proper supervision of all of the Work.

3.3 Request for Information. If the Contractor believes that the Work to be done or any of the matters relative to the Contract Documents are not sufficiently detailed or explained in the Contract Documents, or if the Contractor has any questions as to the meaning or intent of the Contract Documents, Contractor shall immediately submit to Architect and Metro a written Request for Information ("RFI") that shall fully describe the information sought.

3.3.1 The RFI shall be directed to the Project Manager and Architect. Subcontractors shall direct correspondence through the Contractor to the Project Manager and Architect. At a minimum the RFI shall contain: (1) project title, (2) identify the nature and location of each clarification/verification, (3) date, (4) response by and RFI number, (5) subject, (6) initiator of the question, (7) indication of the costs, (8) Contract drawings reference, (9) Contract Specification section, and (10) descriptive text and space for a reply. Each RFI shall be numbered sequentially beginning with #001, and a separate RFI shall be submitted for each item. Verbal discussions/clarifications for minor items can be addressed with the Architect by phone and the Contractor shall follow up with a confirming RFI.

3.3.2 It is Contractor's responsibility to request information under this Section in sufficient time for review by the Architect and Metro so that the orderly progress and prosecution of the Work is not delayed.

3.3.3 The Architect, in consultation with Metro, shall interpret the meaning and intent of the Contract Documents and shall issue, within five (5 working days of receiving an RFI from Contractor, a written Clarification describing such meaning and intent. Additionally, the Architect, after consulting with Metro, may at any time issue a written RFI as deemed necessary to carry out the Work included in the Contract Documents. Notwithstanding any dispute or disagreement that Contractor may have concerning any such RFI, Contractor shall perform the Work as prescribed and in accordance with all such RFI.

3.3.4 If notified by Metro or the Architect that an RFI is forthcoming, any related Work done before the receipt of the RFI shall be coordinated with Metro so as to minimize the effect of the RFI on Work in progress. Any related Work not coordinated with Metro or the Architect done before receipt of the RFI shall be at Contractor's risk and at no cost to Metro if that Work does not conform to the Clarification.

3.3.5 If Contractor proceeds with Work that is not sufficiently detailed or explained in the Contract Documents without requesting and obtaining an RFI pursuant to this Section, Contractor shall do so at its own risk and shall, at no cost to Metro, perform any additional Work that may be required by Metro to bring the Work into conformance with the intent of the Contract Documents.

3.4 Contractor's Claims.

3.4.1 Generally. No claim by Contractor shall be considered or allowed under this Contract except as specifically provided and prescribed under this Section. Failure to make a claim as specifically prescribed by this Section or failure to perform disputed Work, if any, as directed by Metro shall bar Contractor from any recovery or extension of time resulting from the facts surrounding the claim. Contractor's full and complete compliance with this Section shall be a condition precedent to any right of Contractor to further prosecute any claim against Metro arising out of or related to Work described in the Contract Documents. Every decision and action of Metro shall be considered final unless Contractor makes a claim concerning such decision or action pursuant to this Section.

3.4.2 Types of Claims. Contractor claims are limited to the following:

3.4.2.1 Claims based on Excusable Delays as described in Section 3.4.3.

3.4.2.2 Claims based on differing Site conditions as described in Section 3.4.4;

3.4.2.3 Claims based on Clarifications or Change Orders issued by Metro or any other decision, action, or failure to act by Metro as described in Section 3.4.5.

3.4.3 Claims For Excusable Delays.

3.4.3.1 Definition of Excusable Delay. A Delay is "Excusable" if such act, event, or condition has a materially adverse effect on the ability of Contractor to perform its obligations under this Contract as scheduled, and/or materially increases the cost to Contractor to perform such obligations as scheduled and if such act, event, or condition and its effect:

3.4.3.1.1 Are beyond the reasonable control of Contractor (or any third party for whom Contractor is directly responsible); and

3.4.3.1.2 Do not arise out of (a) strikes, labor disputes, or other labor difficulties involving Contractor or its Subcontractors or Suppliers or entities providing transportation to Contractor or its Subcontractors or Suppliers; (b) labor shortages; or (c) changing economic conditions; and

3.4.3.1.3 Could not have been reasonably anticipated by Contractor.

3.4.3.2 Types of Excusable Delay Claims. Excusable Delays are either Compensable or Non-compensable. Claims for Non-compensable Excusable Delays are limited to claims for extension of Contract Time. Contractor may claim both an increase in the Contract Amount and an extension of the Contract Time for Compensable Excusable Delays.

3.4.3.3 Non-Compensable Excusable Delay Claims. Delays resulting from the following acts, events, and conditions are Non-Compensable Excusable Delays:

3.4.3.3.1 An Act of God.

3.4.3.3.2 Unusually Persistent Severe Weather. No claim for extension of the Contract Time will be considered for Unusually Persistent Severe Weather unless Contractor submits documentation within 72 hours of the occurrence of the Unusually Persistent Severe Weather satisfactory to Metro establishing that the weather at the Project Site satisfied the definition of Unusually Persistent Severe Weather and that the delay could not have been avoided by either rescheduling the Work or implementing reasonable measures to protect against the weather so that the Work could proceed.

3.4.3.3.3 Acts of a public enemy, war (whether or not declared), or governmental intervention resulting therefrom, blockage, embargo, insurrection, riot, or civil disturbance.

3.4.3.3.4 The failure to issue or renew, or the suspension, termination, interruption, or denial of, any permit, license, consent, authorization, or approval essential to the Work, if such act or event is not the result of the willful or negligent action or inaction of Contractor or of any third party for whom Contractor is directly responsible, and if Contractor is taking, has taken, or will cause to be taken, all reasonable actions in good faith to contest such action (it being understood that the contesting in good faith of any such action shall not constitute or be construed as a willful or negligent act of Contractor).

3.4.3.3.5 The failure of any appropriate federal, state, municipal, county, or other public agency or authority or private utility having operational jurisdiction over the Work or Site to provide and maintain utilities, services, water and sewer lines, and power transmission lines to the Site, that are required for and essential to the Work.

3.4.3.3.6 Epidemics or quarantines.

3.4.3.3.7 Material, equipment, or fuel shortages or freight embargoes.

3.4.3.3.8 Priorities or privileges established for the manufacture, assembly, or allotment of material by order, decree, or otherwise of the U. S. or by any department, bureau, commission, committee, agent, or administrator of any legally constituted public authority.

3.4.3.4 Compensable Excusable Delay Claims. Delays resulting from the following acts, events, and conditions are Compensable Excusable Delays:

3.4.3.4.1 Changes in the Work ordered by Metro if they require additional time to complete the Work and adversely impact the Critical Path.

3.4.3.4.2 The prevention by Metro of Contractor from commencing or prosecuting the Work.

3.4.3.4.3 Failure by the Architect to respond to a Request for Information within five (5) working days of submittal by the Contractor.

3.4.3.5 Inexcusable Delays. Delays resulting from the following acts, events, and conditions shall not result in Excusable Delays:

3.4.3.5.1 Any delay that could have been avoided by the exercise of care, prudence, foresight, and diligence on the part of Contractor.

3.4.3.5.2 Any delay in the prosecution of parts of the Work that may in itself be unavoidable but that does not necessarily prevent or delay the prosecution of other parts of the Work nor the Substantial Completion of the Work of this Contract within the time specified.

3.4.3.5.3 Any reasonable delay resulting from the time required by Metro for review of submittals or shop drawings submitted by Contractor and for the making of surveys, measurements, and inspections.

3.4.3.5.4 Any delay arising from an interruption in the prosecution of the Work on account of the reasonable interference from Other Metro Contractors that does not necessarily prevent the Substantial Completion of the Work of this Contract within the time specified.

3.4.3.5.5 Any delay resulting in any manner from labor disputes, strikes, or difficulties or any delay resulting in any manner from any labor-related event, act, or condition whether or not Contractor has any control over such event, act, or condition.

3.4.3.5.6 Any delays in delivery of equipment or material purchased by Contractor or its Subcontractors or Suppliers (including Metro-selected equipment. Contractor shall be fully responsible for the timely ordering, scheduling, expediting, delivery, and installation of all equipment and materials.

3.4.3.6 Excusable Delay Claims Procedure.

3.4.3.6.1 Contractor shall, within forty-eight (48) hours of the start of the occurrence or Contractor's first knowledge of the occurrence that is the basis of the claim for Excusable Delay, whichever is earlier, notify Metro in writing of such delay. The written notice by Contractor shall indicate the cause of the delay and shall estimate the possible time extension requested. Within ten (10) days after the cause of the delay has been remedied, Contractor shall give written notice to the Project Manager of any actual time extension and, if the Excusable Delay is a Compensable Excusable Delay, any increase in the Contract Amount requested as a result of the aforementioned occurrence in accordance with this Contract. If Contractor believes that a single circumstance or set of facts gives rise to both a claim for an extension to the Contract Time and an increase in the Contract Amount, Contractor must state both such allegations in one written claim or waive the unstated allegation.

3.4.3.6.2 Submission of timely written notice as specified above shall be mandatory and failure to comply shall be a conclusive waiver to any claim for Excusable Delay by Contractor. Oral notice or statement will not be sufficient.

3.4.3.6.3 Within twenty-one (21) days after Contractor submits to the Project Manager such a written notice for an extension of Contract Time and/or increase in the Contract Amount, the Project Manager will issue the decision on each request. If Contractor is dissatisfied with such decision, Contractor may preserve its claim as provided and prescribed by Section 3.4.6.

3.4.4 Claims for Differing Site Conditions-- Contractor shall promptly, and before the conditions are disturbed, give written notice to the Project Manager of (i) subsurface or latent physical conditions at the Site that differ materially from those indicated in this Contract, or (ii) physical conditions at the Site that were unknown and not reasonably discoverable by means of the Review of Project Conditions required by Section 2.7, are of an unusual nature that differ materially from those ordinarily encountered and generally recognized as inherent in Work of the character provided for in the Contract. The Project Manager shall investigate the Site conditions promptly after receiving the notice. If the conditions do materially so differ as to cause an increase or decrease in Contractor's cost of, or the time required for, performing any part of the Work under this Contract, whether or not changed as a result of the conditions, an equitable adjustment shall be made and a Change Order issued. If Contractor is dissatisfied with the decision of the Project Manager under this Section, Contractor may preserve its claim as provided and prescribed by Section 3.4.6.

3.4.5 Other Contractor Claims-- Contractor claims based on Clarifications or Change Orders issued by Metro or any other decision, action, or failure to act by Metro shall be made according to this Section.

3.4.5.1 Contractor shall, within forty-eight (48) hours following discovery of the facts that give rise to its claim, notify the Project Manager in writing of its intent to make the claim. Within ten (10) days following discovery of the facts that give rise to its claim and prior to commencing the Work or conforming to the Clarification on which the claim is based, if any, Contractor shall submit its formal written claim to the Project Manager. Contractor's formal claim shall include a description of:

3.4.5.1.1 The factual occurrences upon which Contractor bases the claim including the decision, action, or failure to act by Metro or its authorized representatives that allegedly give rise to the claim;

3.4.5.1.2 How Metro's decision, action, or failure to act has affected Contractor's performance or otherwise affected Contractor;

3.4.5.1.3 Whether the claim is for an extension in the Contract Time or increase in the Contract Amount, or both, and the specific extension or increase requested;

3.4.5.1.4 The provisions of the Contract upon which the claim is based.

3.4.5.2 Submission of written notice of intent to make a formal claim as specified above shall be mandatory and failure to comply shall be a conclusive waiver to any claim by Contractor. Oral notice or statement will not be sufficient nor will notice or statement after commencing the Work in question.

3.4.5.3 After the written notification is submitted by Contractor (if the claim is not resolved or withdrawn in writing) and only upon written direction by the Project Manager, Contractor shall proceed without delay to perform the Work pursuant to the direction of the Project Manager. While the Work on an unresolved claim is being performed, Contractor shall keep track of costs and maintain records in the manner set forth in the section on Force Account Work, at no cost to Metro. Such notice by Contractor and the fact that Contractor is keeping track of costs and maintaining records shall not in any way be construed as proving the validity of the claim nor the costs thereof.

3.4.5.4 Provided the claim or claims have been submitted in accordance with the requirements of this Section, the Project Manager will consider and investigate the claim or claims of Contractor. Within twenty-one (21) days of receipt of the above-described written notification of claim, the Project Manager will advise Contractor of the Project Manager's decision to accept or reject the claim or claims, in full or in part. If Contractor is dissatisfied with the decision of the Project Manager under this Section, Contractor may preserve its claim as provided and prescribed by Section 3.4.6.

3.4.6 Preservation of Claims -- Within thirty (30) days after a rejection of a claim, in whole or in part, by Metro under Sections 3.4.3, 3.4.4 or 3.4.5, Contractor may preserve its claim by submitting a fully documented claim package to the Metro Procurement Officer. That package shall include substantiating documentation with an itemized breakdown of Contractor and Contractor's Subcontractors' costs on a daily basis that shall include but not be limited to labor, material, equipment, supplies, services, Overhead, and Profit. All documentation that Contractor believes is relevant to the claim shall be provided in the claim package, including without limitation payroll records, purchase orders, quotations, invoices, estimates, correspondence, profit and loss statements, daily logs, ledgers, and journals. Failure to submit the claim package in full compliance with this requirement and/or maintain cost records as herein required will constitute a waiver of the claim. If Contractor elects to pursue any claims by filing a lawsuit against Metro, it must commence such lawsuit within six (6) months after the date of Substantial Completion. Failure to commence a lawsuit within this time limitation shall constitute a waiver of all such claims by Contractor.

3.5 Metro's Right to Stop, Perform, or Delete Work.

3.5.1 If the Contractor fails to correct Work not in conformance with the Contract or fails to carry out Work in accordance with the Contract, Metro may issue a written order to the Contractor to stop all or part of the Work until the deficiency set forth in the order has been corrected. Metro has no duty to exercise this right for the benefit of anyone other than Metro.

3.5.2 If the Contractor refuses or fails to comply with the Contract, Metro may correct any deficiency or defect or perform Work that the Contractor has failed to perform, or take other appropriate action, without prejudice to any other remedy Metro may have under the Contract. Before taking that action, Metro will provide the Contractor and its sureties with seven days' written notice of its intentions, unless an emergency or dangerous condition exists, in which case the action may be taken without notice. If Metro performs part of the Contractor's Work, corrects deficiencies, or is required to take action as a result of an emergency or dangerous condition, Metro will deduct the cost of that action from any payment then or thereafter due the Contractor. If the cost of Metro's action exceeds any sums held by Metro and otherwise payable to the Contractor, the Contractor agrees to reimburse Metro for any excess costs.

3.5.3 Metro has the right to delete Work from this Contract, and the Parties agree that such action does not constitute a breach of contract. Therefore, Metro may delete Work from the Contract and perform it with its own forces or have such Work performed by another Contractor. If Work is deleted from the Contract, the cost of performing such Work will be deducted from the Contract Amount to be paid to the Contractor. Any objection to the change in Contract Amount must be processed as a claim as required by Section 3.4.5.

3.5.4 Metro's rights as stated in this Section 3.5 are in addition to and do not limit Metro's other rights or remedies.

3.6 Metro's Right to Adjust Payments.

3.6.1 Adjusted Payments for Delay. Time is of the essence in this Contract. Metro and Contractor understand and agree that Metro will be damaged if Contractor fails to substantially complete the Work within the Contract Time, and that Metro will be vulnerable to further damages if Metro is obligated to continue paying Contractor for Work performed after the Contract Time has expired. It is therefore agreed that upon the expiration of the Contract

Time, Metro may adjust its payments to Contractor by any combination of the following: (1) making no further payments to Contractor until the Work is substantially complete; (2) paying the Subcontractor costs incurred by Contractor without any overhead, profit, or fee of any kind going to Contractor; and/or (3) collection of liquidated damages as designated in the Contract. Permitting Contractor to continue and finish the Work or any part thereof after the Contract Time has expired shall not waive any of Metro's rights under this Section or the balance of the Contract Documents.

3.6.2 Adjusted Payments Not a Bar to Metro's Right to Other Damages. Payment of adjusted payments shall not release Contractor from obligations in respect to the complete performance of the Work, nor shall the payment of such adjusted payments constitute a waiver of Metro's right to collect any additional adjusted payments that it may sustain by failure of Contractor to fully perform the Work, it being the intent of the Parties that the aforesaid adjusted payments be full and complete payment only for failure of Contractor to complete the Work on time. Metro expressly reserves the right to make claims for any and all other damages that Metro may incur due to Contractor's failure to perform in strict accordance with this Contract.

3.7 Mediation. Both Parties shall endeavor to negotiate resolutions to all disputes arising out of this Contract. Any controversy or claim arising out of or relating to this Contract that remains unresolved after such negotiations shall be submitted to mediation prior to the commencement of litigation.

3.7.1 The mediator shall be an individual mutually acceptable to both Parties. Should the Parties disagree on the selection of a mediator, the Parties shall look to the local circuit court or the Oregon Dispute Resolution Commission. Each Party shall pay its own costs for the time and effort involved in mediation. The cost of the mediator shall be split equally between the two Parties.

3.7.2 Both Parties agree to exercise their best effort in good faith to resolve all disputes in mediation. Participation in mediation is a mandatory requirement on both Metro and Contractor. The schedule and time allowed for mediation shall be mutually acceptable. The mediation process is nonbinding.

3.7.3 Contractor agrees to consolidation of any mediation between Metro and Contractor with any other mediation involving, arising from, or relating to this Contract.

3.8 Litigation. All disputes not resolved by mediation shall be decided exclusively by a court of competent jurisdiction in Multnomah County under the laws of the state of Oregon.

3.9 Work to Continue Notwithstanding Dispute. In no event shall submission of a dispute arising out of this Contract by either Party relieve Contractor of its obligation to fully perform the requirements of the Contract as directed by Metro pending resolution of the dispute pursuant to the procedures set forth in this Article. In the event Contractor, in Metro's opinion, fails to fully perform the requirements of the Contract pending resolution of a dispute, Metro shall be entitled to exercise its rights to impose adjusted payments pursuant to Section 3.6, and/or terminate the Contract pursuant to Article 15 of these General Conditions.

ARTICLE 4
SUBCONTRACTING AND ASSIGNMENT OF THE CONTRACT

4.1 Subcontracting. Contractor shall arrange and delegate its Work in conformance with trade practices and union regulations, if applicable, but shall remain responsible to Metro for performance of all Work required or implied by the Contract Documents. Contractor shall also be responsible for coordinating the efforts of its Subcontractors and Suppliers.

4.2 Objection to Subcontractors or Suppliers. Metro reserves the right to make reasonable objection to any of Contractor's Subcontractors or Suppliers if Metro discovers any data or information at any time during the performance of the Contract that gives Metro a basis for such reasonable objection. Metro will notify Contractor in writing if Metro has any reasonable objection to any of Contractor's Subcontractors or Suppliers. Contractor shall not subcontract with any Subcontractor or Supplier to which Metro has made a reasonable objection. In the event of Metro's reasonable objection to any Subcontractor or Supplier, Contractor shall propose another entity to which Metro has no reasonable objection.

4.3 Substitution, Change, or Addition of Subcontractors or Suppliers. At any time that Contractor intends to substitute, change, or add a Subcontractor or Supplier during the performance of the Contract, Contractor shall give Metro prior written notice of such intention. Contractor shall not substitute, change, or add any such Subcontractor or Supplier if Metro gives Contractor reasonable objection in writing within ten (10) days after Metro receives such notice.

4.4 Removal of Subcontractors at Request of Metro. When any Subcontractor fails to prosecute a portion of the Work in a satisfactory manner, Metro may so notify Contractor. If the Subcontractor fails to cure the unsatisfactory Work promptly, Contractor shall remove such Subcontractor immediately upon written request of Metro

and Contractor shall request approval from Metro of a new Subcontractor to perform this section of the Work at no increase in the Contract Amount, and with no change in the Contract Time.

4.5 Metro Not Obligated to Detect Unsatisfactory Work. Nothing contained in this Contract shall obligate Metro or place on Metro an affirmative duty to detect or discover unsatisfactory Work or materials of Contractor's Subcontractors or Suppliers. Failure of Metro to detect or discover such unsatisfactory Work or materials shall not relieve Contractor of any of its obligations under this Contract.

4.6 No Contractual Relationships Between Metro and Contractor's Subcontractors and Suppliers. Nothing contained in this Contract is intended nor shall be construed to create any contractual or third party beneficiary relationship between Metro and any of Contractor's Subcontractors, Suppliers, or agents, save and except in relation to the Labor and Materials Payment Bond.

4.7 Contractor's Agreements with Subcontractors.

4.7.1 Contractor shall provide in all subcontract and supply agreements that the Subcontractor or Supplier will be bound by the terms and conditions of this Contract to the extent that they relate to the Subcontractor's or Supplier's Work. Contractor shall require each Subcontractor to enter into similar agreements with sub-tier Subcontractors and Suppliers. Contractor shall make available to each proposed Subcontractor and Supplier, prior to the execution of the subcontract or supply agreement, copies of the Contract Documents that apply to the Work and materials to be provided by the Subcontractor or Supplier. Subcontractors and Suppliers shall similarly make copies of applicable portions of such documents available to their respective proposed sub-tier Subcontractors and Suppliers.

4.7.2 All Subcontractor and Supplier agreements shall also provide that they are assignable to Metro at Metro's option, in the event that Metro terminates the Contract. Contractor will provide to Metro a copy of all subcontracts and supply contracts for permanent materials.

4.7.3 The Contractor will provide Metro with copies of all of its subcontracts, purchase orders, and supply agreements relating to the Work upon Metro’s request within three (3) business days of the request.

4.8 Assignment. Contractor shall constantly give its personal attention to the faithful prosecution of the Work. Contractor shall keep the Work under its personal control and shall not assign any or all of Contractor's rights, by power of attorney or otherwise, nor delegate any of its duties except with the prior written approval of the Metro Council.

ARTICLE 5
TIME OF COMPLETION AND SCHEDULE FOR THE WORK

5.1 Prosecution of Work Generally. Contractor shall commence the Work within five (5) days after issuance of written Notice to Proceed from Metro and will diligently prosecute the Work to its Final Completion and Acceptance. The start of Work shall include attendance at preconstruction conferences, preparation and submittal of shop drawings, equipment lists, Schedule of Values, CPM construction schedules, requests for substitutions, and other similar activities, as described by these Contract Documents.

5.2 Time of Completion.

5.2.1 Contractor shall bring the Work to Substantial Completion within the Contract Time as set forth in the Construction Agreement.

5.2.2 The time limits stated in these Contract Documents are of the essence of this Contract. By executing the Construction Agreement, Contractor confirms that the Contract Time is a reasonable period for performing all of the Work.

5.2.3 Failure of Contractor to substantially complete the Work within the Contract Time and according to the provisions of these Contract Documents shall subject Contractor to liquidated damages pursuant to the applicable sections of these Contract Documents.

5.3 Extensions of Time. Extensions of the Contract Time shall be made pursuant to the procedure and according to the provisions and requirements contained in Articles 3 and 8 of these Contract Documents.

5.4 Project Scheduling. Contractor shall submit to Metro a detailed Construction Schedule for completion of the Work pursuant the Specifications following the Critical Path method. The Construction Schedule shall, when approved and as updated and approved by Metro, become a part of the Contract Documents.

5.5 Use of Completed Parts of the Work Before Acceptance.

5.5.1 Metro may decide to use part of the Work that has been completed before completion of all the Work required by the Contract. If that occurs, Metro will notify the Contractor in writing of its intention.

5.5.2 When use of part of the Work by Metro begins, the Contractor is:

5.5.2.1 Relieved of the duty of maintaining and protecting that portion of the Work, provided that it has been completed in accordance with the Contract.

5.5.2.2 Relieved of responsibility for injury or damage to the portion of Work used by Metro from use by public traffic or from the action of the elements of nature or from any other cause, except injury or damage resulting from the Contractor's own operations or from its negligence.

5.5.2.3 Relieved of the responsibility of cleaning up that portion of the Work before final acceptance, unless the Contractor's own operations require such cleanup.

5.5.3 Use by Metro of a part of the Work as described in this Section does not constitute final acceptance of the Work as a whole or in any part.

ARTICLE 6
COORDINATION WITH OTHER METRO CONTRACTORS

6.1 Other Metro Contractors Generally. Metro reserves the right to award other contracts in connection with the Work. Contractor shall allow such Other Metro Contractors reasonable opportunity for storage of their materials and execution of their Work, shall ensure that the execution of Contractor's Work properly connects and coordinates with Work of all Other Metro Contractors, and shall cooperate with Other Metro Contractors to facilitate the Work in such a manner as Metro may direct. Connection between the Work of the Contractor and Other Metro Contractors will be the responsibility of the Party that is last in time to construct, unless otherwise directed in the Contract Documents.

6.2 Duty to Inspect Other Metro Contractors' Work. Where Contractor's Work is associated with that of Other Metro Contractors, or is to interface in any way with such Other Metro Contractors' Work, Contractor shall examine, inspect, and measure the adjacent or in-place Work of such Other Metro Contractors. If Contractor determines that any defect or condition of such adjacent or in-place Work will impede or increase the cost of Contractor's performance or otherwise prevent the proper execution of Contractor's Work, Contractor shall immediately, and before performing any Work affected by the Other Metro Contractors' work, submit an RFI to Metro pursuant to Section 3.3. If Contractor proceeds without examining or inspecting the Work and submitting a Request for Information, Contractor shall be held to have accepted the Other Metro Contractors' Work or material and the existing conditions, shall be responsible for any defects in Contractor's Work resulting therefrom, and shall not be relieved of any obligation or any warranty under this Contract because of any such condition or imperfection. This provision shall be included in any and all of Contractor's subcontracts for Work to be performed.

6.3 Latent Defects in Other Contractor's Work. Section 6.2 does not apply to latent defects. Contractor shall report latent defects in any Other Metro Contractors' Work at any time such defects become known or Contractor should have known, and Metro shall promptly thereafter take such steps as may be appropriate. If Contractor in the exercise of reasonable care should have known of such defects but did not report them, such defects shall not be considered latent.

6.4 Duty to Maintain Schedule. It shall be the responsibility of Contractor to maintain its schedule so as not to delay the progress of the Project or the Work of Other Metro Contractors. Contractor is required to cooperate in every way possible with Other Metro Contractors. Except as otherwise specifically provided in this Contract, no additional compensation will be paid for such cooperation. If Contractor delays the progress of the Project or the progress of Other Metro Contractors, it shall be the responsibility of Contractor to take all of the steps necessary to bring the affected Work into compliance with any affected schedules and to indemnify Metro from all liability for such delays pursuant to Article 11. Metro shall be under no duty to monitor or detect any delays of Contractor or any Other Metro Contractor on the Project or any lack of coordination on the Project. Consequently, the failure of Metro to so monitor or detect shall not be construed as relieving Contractor of its duties to fully perform all of its obligations under the Contract.

6.5 Failure to Maintain Schedule.

6.5.1 If, in the opinion of Metro, Contractor falls behind the Construction Schedule or delays the progress of Other Metro Contractors and is not entitled to an extension of time pursuant to the Contract Documents, Contractor shall perform all steps that are necessary, in the opinion of Metro, to bring Contractor's Work into compliance with the Construction Schedule or to remedy any delay to the progress of Other Metro Contractors. Contractor shall submit operation plans to Metro that shall fully demonstrate the manner of intended compliance with this Section. The steps referred to above shall include but not be limited to:

6.5.1.1 Increased manpower in such quantities and crafts as will substantially eliminate the backlog of Work.

6.5.1.2 Increase, when permitted, the number of working hours per shift, shifts per working day, working days per week, or the amount of equipment or any combination of the foregoing, sufficient to eliminate the backlog of Work.

6.5.1.3 Reschedule activities to achieve maximum practical concurrence of accomplishment of activities.

6.5.1.4 Expedite delivery of materials and equipment, such as use of airfreight.

6.5.2 If Metro directs Contractor to take measures described in this Section, or if Contractor takes such measures without direction from Metro, Contractor shall bear all costs of complying. Metro shall, however, reimburse Contractor for reasonable costs of complying if such directive to accelerate from Metro was issued to overcome delay caused by the acts or omissions of Metro or persons acting for Metro, provided Contractor has complied with all applicable provisions of Articles 3 and 8 of these General Conditions.

6.5.3 Failure to maintain the construction schedule or to take action to regain the schedule or to furnish a schedule as outlined in the Specifications may result in withholding all or part of the monthly progress payments.

6.6 Failure to Coordinate Work. If Contractor fails to coordinate its Work with the Work of Other Metro Contractors as directed by Metro, Metro may, upon written notice to Contractor:

6.6.1 Withhold any payment otherwise due hereunder until Contractor complies with Metro's directions.

6.6.2 Direct others to perform portions of the affected Work and charge the cost of such Work against the Contract Amount or deduct the cost from sums held in Retainage.

6.6.3 Terminate any or all portions of the Work for Contractor's failure to perform in accordance with the Contract.

6.7 Other Metro Contractors' Failure to Coordinate. If Contractor determines that any Other Metro Contractor on this Project is failing to coordinate its Work with the Work of Contractor, Contractor shall notify Metro immediately and before performing any affected Work.

6.8 Conflicts Among Contractors. Any difference or conflict that may arise between Contractor and Other Metro Contractors in regard to their Work shall be adjusted as determined by Metro. If directed by Metro, Contractor shall suspend any part of the Work specified or shall carry on the same in such a manner as may be prescribed by Metro when such suspension or prosecution is necessary to facilitate the Work of Other Metro Contractors.

6.9 Coordination Drawings. Contractor shall prepare coordination drawings as determined necessary by Metro to satisfactorily coordinate and interface its Work with the Work of all Other Metro Contractors, thereby avoiding conflicts that may arise.

6.10 Furnished by Owner, Installed by Contractor ("FOIC") Items.

6.10.1 Owner Responsibilities for FOIC Items. Owner-furnished products/items are indicated on the drawings as FOIC items. Owner's responsibilities include: (1)arrangement for and delivery of necessary shop drawings, product data, and samples to the contractor; (2) arrangement of and payment for Product delivery to the Site; (3) delivery of Suppliers' bill of materials to Contractor; (4) inspection of deliveries jointly with the Contractor and recording shortages of and damaged or defective items; (5) submission of claims for transportation damage; (6) arrangement for replacement of damaged, defective, or missing items; and (7) arrangement for manufacturers' warranties, bonds, service, and inspections as required. Owner is responsible for scheduling all FOIC items in accordance with Contractor's Construction Schedule.

6.10.2 Contractor Responsibilities for FOIC Items. The following outlines the responsibilities of the Contractor for FOIC items: (1) designating a delivery date for each item in the Construction Schedule; (2) reviewing shop drawings, product data, and samples; (3) immediately notifying the Project Manager of any discrepancies or problems anticipated in the use of the product; (4) reviewing and unloading products at the Site; (5) promptly inspecting products jointly with Owner and recording shortages and damaged or defective items; (6) handling products at the Site, including uncrating and storage; (7) protecting products from exposure to elements and damage; (8) assembling, installing, connecting, adjusting, and finishing product as stipulated in the Specifications; and (9) repairing or replacing items damaged by Contractor.

6.11 Conferences. At any time during the progress of the Work, Metro shall have authority to require Contractor to attend any conference of any or all of the Contractors engaged in the Project or related projects.

6.11.1 Project Meetings. The Contractor will schedule and chair meetings and conferences at the Project Site unless otherwise indicated. Contractor will inform participants and other individuals whose presence is required of the date and time of each meeting. The Contractor shall prepare an agenda, distribute to all attendees, and prepare minutes that reflect significant discussions and agreements achieved. Meeting minutes shall be distributed to everyone concerned, including Metro, within three (3) days of the meeting.

6.11.2 Pre-construction Conference. The Contractor will schedule a pre-construction conference prior to start of construction. The meeting will be scheduled at a time convenient to Metro and Architect, but no later than five (5) days after execution of the Contract. The conference will be held at the Project Site or another convenient location. The purpose of the meeting is to review responsibilities and personnel assignments. Attendees will include authorized representatives of Metro, Architect and its consultants, Contractor and its superintendent, major subcontractors and suppliers, and other concerned parties. All participants shall be familiar with the Project and be authorized to conclude matters relating to the Work. The agenda shall include tentative construction schedule, phasing, critical Work sequencing and long-lead items, designation of key personnel and their duties, procedures for processing field decisions and Change Orders, procedures for RFIs, procedures for testing and inspecting, procedures for processing applications for payment, distribution of Contract Documents, submittal procedures, preparation of record documents, use of premises, Work restrictions, Owner's occupancy requirements, responsibilities for temporary facilities and Site protection, construction waste management and recycling, parking availability, office, Work, and storage areas, equipment deliveries and priorities, first aid, security, progress cleaning, and working hours.

6.11.3 Pre-installation Conferences – Contractor will conduct a pre-installation conference at the Project Site before each construction activity that requires coordination with other construction and includes installation of FOIC items. Contractor is responsible for conducting these meetings, which shall occur on the same date as progress meetings, if possible. Attendees shall include the installers and representatives of manufacturers and fabricators involved in or affected by the installation and its coordination with other materials or installations. Agenda items will include Contract Documents, options, related RFIs, related Change Orders, purchases, deliveries, submittals, review of mock-ups, possible conflicts, compatibility problems, time schedules, weather limitations, manufacturers' written recommendations, warranty requirements, compatibility of materials, acceptability of materials, temporary facilities and controls, space and access limitations, regulations of authorities having jurisdiction, testing and inspecting, installation procedures, coordination with other Work, required performance results, protection of adjacent Work, and protection of the Site and its elements. The Architect shall record significant conference discussions, agreements, and disagreements, including corrective action measures and action.

ARTICLE 7
CONTROL AND QUALITY OF WORK AND MATERIAL

7.1 Quality Control.

7.1.1 Generally. Contractor has the primary responsibility for quality control. Contractor will provide continuous superintendence and inspection to insure that the Work is completed in accordance with the plans and Specifications. During the performance of the Work, Metro, the Architect, Special Inspectors, and any representatives of federal, state, and local agencies having jurisdiction over the Work may enter the Project Site, the shops where any part of the Work is being prepared, or the factories or sites where any materials for use in the Work are being or will be manufactured or derived. Contractor shall provide proper and safe facilities for such inspections, and shall make arrangements with manufacturers or other suppliers to facilitate inspection of their processes and products to such extent as Metro's interest may require. No claims for extension of the Contract Time or increase in the Contract Amount shall be allowed for any access allowed to Metro under this Section.

7.1.2 Quality Control Plan. Contractor shall prepare and submit a Quality Control Plan to the Project Manager within thirty (30) days following the Notice to Proceed. The Plan will describe the Contractor's procedures for implementing the Quality Control Plan. The Plan shall include without limitation the Quality Control organization, inspection procedures, tests anticipated, materials control, contingency plans related to fire protection and remediation of contaminated releases or other environmental improvement, and reports. Metro reserves the right to accept, reject, or modify the Quality Control Plan. Contractor will submit an interim Quality Control Plan prior to the start of Work to cover the first thirty (30) days of construction.

7.1.3 Quality Control Manager. Prior to initiation of construction, Contractor shall designate in writing a Quality Control Manager who shall be responsible for coordinating Contractor's Quality Control Program. The individual so designated shall be the interface with the Project Manager on matters relating to submittals, inspection, scheduling, unacceptable Work product, and corrective actions. Metro reserves the right to accept or reject the Quality Control Manager designated by Contractor.

7.2 Inspection. Contractor has the primary responsibility for providing inspection and testing, except as otherwise set forth in the Specifications. Metro and its agents will also inspect at their discretion or as outlined in the Specifications.

7.2.1 Generally. At all times during construction of the Work, Contractor shall permit Metro, the Architect, and Special Inspectors, or any representatives of federal, state, and local agencies having jurisdiction over the Work, to visit and monitor the progress of the Work for conformance of the Work with the Contract Documents.

7.2.2 Special Inspections.

7.2.2.1 At all times during construction of the Work, Contractor shall permit Metro, the Architect, and Special Inspectors, or any representatives of federal, state, and local agencies having jurisdiction over the Work, to visit and inspect the Work, the materials and the manufacture and preparation of such materials, and subject the Work and materials to inspection and testing to determine if the Work conforms to the requirements of the Contract Documents. Contractor shall maintain proper facilities and safe access for all such inspections.

7.2.2.2 The Contractor is responsible for scheduling and coordination of special inspections. Contractor shall be diligent in scheduling special inspections and make every effort to combine special inspections to avoid unnecessary budget impacts.

7.2.2.3 The Contract Documents or regulatory agencies may require that portions of the Work be observed, reviewed, tested, or inspected before they are obscured or covered. Similarly, upon request, the Project Manager is entitled to observe portions of the Work before they are covered or obscured. Contractor shall be solely responsible for notifying Project Manager at least two (2) working days prior to performing such Work so that necessary arrangements for inspection and testing can be made. If the Contractor covers or obscures a portion of the Work that is required or requested to be observed, it will uncover the Work for observation and bear any cost associated with that activity without a change in Contract Time.

7.2.2.4 The Project Manager may request to see a portion of the Work that has been covered regardless of the requirements of the Contract Documents, regulatory agencies, or a prior request. Thereafter the Contractor must comply with Metro's request. If, on inspection by the Project Manager, the portion of the Work that is uncovered is found to be in accordance with the Contract Documents, Metro will bear all costs associated with that activity and provide additional Contract Time if that activity would cause the Contractor to incur liquidated damages. But if, upon inspection by the Project Manager, the portion of the Work that is uncovered is found not to be in accordance with the Contract Documents, the Contractor will correct the Work and bear any cost associated with that activity without a change in Contract Time. Metro retains the right at any time during construction, or at any time during production, fabrication, or preparation of the Work, to test samples to determine whether they meet the requirements of the Contract Documents. Metro may test any sample, regardless of prior certification, and regardless of whether any prior certification was required. Metro may either conduct the test with its own forces or hire other persons to perform this Work.

7.2.2.5 Metro retains the right at any time during construction, or at any time during production, fabrication, or preparation of the Work, to test samples to determine whether they meet the requirements of the Contract Documents. Metro may test any sample, regardless of prior certification, and regardless of whether any prior certification was required. Metro may either conduct the test with its own forces or hire other persons to perform this Work.

7.2.2.6 If a sample is to be tested prior to its incorporation into the Work, the Contractor may not incorporate the material, product, part, or equipment into the Work until testing is completed and Metro gives permission for its use.

7.2.2.7 Metro will bear the costs of testing unless the tests show that the material, product, part, or equipment failed the test and did not conform to the requirements of the Contract, in which case the Contractor will bear the costs of testing.

7.2.2.8 If the sample was previously incorporated into the Work and testing shows that the sample does not meet the requirements of the Contract Documents, the Contractor will pay for the test and for replacing and repairing any equipment, materials, products, or portion of the Work in order to meet the requirements of the Contract Documents.

7.2.3 Notice to Metro for Certain Work Days. Whenever Contractor intends to perform Work on Saturday, Sunday, or any legal holiday, it shall give written notice to Metro of such intention at least two (2) working days prior to performing such Work, or such other period as may be specified by Metro, so that Metro may make the necessary arrangement for testing and inspection.

7.2.4 Correction of Defective Work Before Acceptance. Any defective Work or Work that otherwise fails to conform to the Contract Documents that is discovered before Final Completion and Acceptance of the Work, shall be corrected immediately by Contractor, and any unsatisfactory materials shall be rejected and replaced with satisfactory materials, notwithstanding that they may have been overlooked by the authorized inspector. The

inspection of the Work by Metro, the Architect, or any other agency shall not relieve Contractor of any of its obligations to perform fully all of the terms and provisions of the Contract Documents.

7.2.5 Acceptance Not Implied by Failure to Object. Failure or neglect on the part of Metro or any of its authorized representatives to condemn or reject defective, improper, or inferior Work or materials shall not be construed to imply a final acceptance of such Work or materials and shall not be construed as relieving Contractor of its duties to perform fully all requirements of the Contract Documents.

7.2.6 Replacement and correction of defective Work before the Work is completed and accepted is not limited by any warranty period otherwise established by the Contract.

7.3 Unsatisfactory Materials and Workmanship.

7.3.1 Generally. Material, Work, or workmanship that, in the opinion of the Project Manager, does not conform to the Contract Documents, or is not equal to the samples submitted to and approved by the Project Manager, or is in any way unsatisfactory or unsuited to the purpose for which it is intended, will be rejected. Contractor shall bear the cost of correcting or removing, as deemed necessary by Metro, all non-conforming materials, defective Work, or unsatisfactory workmanship. Contractor shall make a close inspection of all materials as delivered, and shall promptly replace all defective materials with conforming materials without waiting for their rejection by Metro.

7.3.2 Removal of Rejected or Non-Conforming Work or Material. All rejected material or Work, and all defective or non-conforming Work or material, shall be removed from the Site without delay. If Contractor fails to do so within forty-eight (48) hours after having been so directed by Metro, the rejected material may be removed by Metro and the cost of removal charged against Contractor and deducted from Retainage held by Metro or offset against payments due Contractor, at Metro's option. If in the judgment of Metro it is undesirable or impracticable to replace any defective or non-conforming Work or materials, the compensation to be paid to Contractor shall be reduced by Change Order or Force Account, as applicable, by such amount as, in the judgment of Metro, shall be equitable.

7.4 General Warranty of Contractor. Contractor warrants to Metro that materials and equipment provided under the Contract will be of good quality and new unless otherwise required or permitted by the Contract Documents, that the Work will be free from defects and contaminants not inherent in the quality required or permitted, and that the Work will conform with the requirements of the Contract Documents. Work not conforming to these requirements, including substitutions not properly approved and authorized, may be considered defective. Contractor's warranty excludes remedy for damage or defect caused by abuse, modifications not executed by Contractor, improper or insufficient maintenance, improper operation, or normal wear and tear under normal usage. If required by Metro, Contractor shall furnish satisfactory evidence as to the kind and quality of materials and equipment. The warranty made by Contractor under this Section shall be in addition to any other specific warranties and certifications required elsewhere in these Contract Documents.

7.5 Third-Party Warranties.

7.5.1 The Contractor shall obtain from Subcontractors, manufacturers, and suppliers guarantees and warranties according to the Contract Documents with the optimum terms and longest periods reasonably obtainable. The documentation must also include all maintenance and operational documentation required to sustain said warranties.

7.5.2 All guarantees or warranties of materials furnished to the Contractor or Subcontractor by any manufacturer or supplier shall be deemed to run for the benefit of the Owner.

7.5.3 As a condition of Substantial Completion of the Project by the Owner, the Contractor shall deliver to the Owner via the Architect three (3) bound volumes of all guarantees and warranties on material furnished by all manufacturers and suppliers to the Contractor and all its Subcontractors, with duly executed instruments properly assigning the guarantees and warranties to the Owner. The guarantees and warranties in each bound volume shall be grouped together by trade and properly indexed. The Contractor shall assign to the Owner, and shall deliver to the Owner, all manufacturers' warranties not later than the date of Substantial Completion.

7.6 Subcontractor Warranties. The Contractor shall and does hereby assign to the Owner the benefits of all warranties and guarantees of all Subcontractors, but such assignment shall not relieve the Contractor of its warranty obligations to the Owner under these General Conditions and other Contract Documents.

7.7 Correction of Work by Contractor.

7.7.1 Any portion of the Work that does not conform to the requirements of the Contract is unacceptable or defective and must be removed and corrected by the Contractor, even if it is contended that Project Manager or other assigned personnel knew or should have known of the existence of the unacceptable Work. This obligation includes defective Work discovered during construction and within one (1) year after the date of Substantial Completion.

7.7.1.1 All portions of the Work that do not conform to the requirements of the Contract Documents must be corrected within a reasonable time at the Contractor's sole expense and without an extension of Contract Time.

7.7.1.2 Metro may replace or correct Work within a reasonable time if the Contractor fails to do so and may charge the Contractor with all reasonable costs incurred while performing that Work, as well as the costs of storing any salvageable materials or equipment. If that occurs, Metro is also entitled to deduct such costs from any sums otherwise due the Contractor.

7.7.1.2.1 If salvageable materials, equipment, or both are stored, Metro will notify the Contractor of the storage and give the Contractor ten days to remove the materials. If the Contractor fails to remove them by the end of that time, Metro may sell them in any commercially reasonable manner, whether privately or publicly.

7.7.1.2.2 If sale is made, Metro will keep all proceeds to the extent that the proceeds do not exceed the costs incurred in correcting and replacing the Work and in storing the materials and equipment. The Contractor will pay Metro any difference in costs that may remain after the sale. If the proceeds exceed Metro's cost, however, it will forward those sums to the Contractor.

7.7.2 In the case of equipment manufactured by others and supplied and/or installed by Contractor, the one (1)-year period shall commence upon the date of first beneficial operation of such equipment by Metro. In the case of Work that is corrected or replaced by Contractor, the one (1)-year period shall commence again on the date of acceptance by Metro of such corrected or replaced Work. Testing shall not be construed to mean acceptance.

7.7.3 If Metro does not require correction or replacement of defective Work or Work failing to conform to the Contract Documents, Contractor, if required by Metro, shall repay to Metro such portion of the Contract Amount as is equitable under the circumstances, as determined by Metro.

7.7.4 Contractor's responsibilities under this Section shall not extend to correction or replacement of defects that are attributable to mistreatment by Metro or to normal wear and tear.

7.8 Warranty and Correction Agreements by Subcontractors.

7.8.1 Generally. In addition to any requirements for written warranties required by the Specifications, Contractor shall require all of its Subcontractors and Suppliers of any tier to make the same warranty to Metro as Contractor makes under Section 7.4. Contractor shall also require all of its Subcontractors and Suppliers of any tier to agree to correct or replace defective Work or Work not conforming to the Contract Documents, and to take full responsibility for defective materials in the same manner as Contractor agrees to correct or replace such Work under Section 7.5.

7.8.2 Form of Submissions. Contractor shall require all of its Subcontractors and Suppliers of any tier to sign documents evidencing the promises made pursuant to Section 7.8.1 above and shall submit such documents to Metro with its request for Final Payment. Such documents shall be signed by both Contractor and the applicable Subcontractor or Supplier and shall be in the form attached as Exhibit 1 to these General Conditions.

7.9 Remedies Not Exclusive. The remedies provided for in this Article shall not be exclusive, but are in addition to all other remedies of Metro with respect to latent defects, frauds, or failure to perform all Work as required by the Contract Documents.

7.10 Proof of Compliance with Contract Provisions. For Metro to determine whether Contractor has complied or is complying with the requirements of the Contract that are not readily enforceable by inspection and test of the Work, Contractor shall, upon request, promptly submit to Metro such properly authenticated documents as may be necessary to demonstrate compliance with the Contract or other satisfactory proof of its compliance with such requirements.

7.11 Patents, Copyrights, Trademarks. All fees or costs of claims for any patented invention, article, or arrangement or any copyrights or trademarks that may be used upon or in any manner connected with the performance of the Work or any part thereof, shall be included in the Bid or Proposal for doing the Work. Contractor shall save, keep, hold harmless, and fully indemnify Metro and Architect from all damages, claims for damage, lawsuits, costs, expenses, or liabilities of whatever nature in law or equity, including attorney fees and court costs, that may at any time arise or be set up for any infringement of the patent rights, copyrights, or trademarks of any person or persons in consequence of the use by Metro of articles to be supplied under the Contract and of which Contractor is not the patentee or assignee or has not the lawful right to sell the same. This is in addition to all other hold-harmless and indemnification clauses in these Contract Documents.

7.12 Anti-Trust Claims.

7.12.1 By entering into this Contract, Contractor, for consideration paid to Contractor under the Contract, does irrevocably assign to Metro any claim for relief or cause of action that Contractor now has or that may

accrue to Contractor in the future, including at Metro's option, the right to control any such litigation on such claim for relief or cause of action, by reason of any violation of 15 USC Section 1-15, ORS 646.725, or ORS 646.730 in connection with any goods or services that are used, in whole or in part, for the purpose of carrying out Contractor's obligations under this Contract.

7.12.2 Contractor shall require all Subcontractors and Suppliers to irrevocably assign to Metro, as a third-Party beneficiary, any right, title, or interest that has accrued or may accrue to the Subcontractors or Suppliers by reason of any violation of 15 USC Section 1-15, ORS 646.725, or ORS 646.730, including, at Metro's option, the rights to control any litigation arising hereunder, in connection with any goods or services provided to the Subcontractors or Suppliers by any person, in whole or in part, for the purpose of carrying out the Subcontractors' or Suppliers' obligations as agreed to by Contractor in pursuance of the completion of the Contract. Contractor shall require all Subcontractors and Suppliers to Execute the Assignment of Antitrust Claims attached as Exhibit 2 to these General Conditions as part of Contractor's subcontract with Subcontractor or Supplier.

7.12.3 In connection with Contractor's, Subcontractors' or Suppliers' assignment, it is an express obligation of Contractor, Subcontractor, or Supplier that it will take no action that will in any way diminish the value of the rights conveyed or assigned hereunder to Metro. It is an express obligation of Contractor, Subcontractor, or Supplier to advise the Office of Metro Attorney:

7.12.3.1 In advance, of its intention to commence any action on its own behalf regarding such claims for relief or causes of action;

7.12.3.2 Immediately, upon becoming aware of the fact that an action has been commenced on its own behalf by some other person or persons, of the impendency of such action; and

7.12.3.3 The date on which it notified the obligor(s) of any such claims for relief or causes of action of the fact of its assignment to Metro.

7.12.4 In the event that any payment under any such claim is made to Contractor, Subcontractor, or Supplier, it shall promptly pay over to Metro its proportionate share thereof, if any, assigned to Metro under this Section 7.12.

ARTICLE 8
CHANGES IN THE WORK

8.1 Change Orders Generally.

8.1.1 Metro and the Contractor mutually agree that changes in plans, quantities, or details of the Work are inherent in the nature of construction and may be necessary or desirable. Therefore, without impairing the Contract, Metro reserves the right to require changes determined necessary or desirable to complete the proposed construction within the general scope of the Work provided for in the Contract or to order extra Work if that is required. Performance of changed or extra Work will not invalidate the Contract or release the Contractor's surety from its obligations. Changes to the Contract Amount, if any, as a result of the performance of changed or extra Work must be made pursuant to this Article 8.

8.1.2 The only authorized method for increasing or changing the amount of compensation, increasing the amount of Contract Time, or changing the scope of Work to be performed is through the execution of a written Change Order.

8.1.3 Change Orders must be executed in advance when any changed or extra Work for which additional compensation is due will be performed, unless the Work is Force Account Work.

8.1.4 Metro may, at its discretion, also require the signature of Contractor's surety on the Change Order. Prior to the approval of such Change Order, the Architect shall have approved any design modifications entailed thereby.

8.1.5 Agreement on any Change Order shall constitute a final settlement of all matters relating to the changes in the Work that are the subject of the Change Order, including without limitation all direct and indirect costs associated with such change, and any and all adjustments to the Contract Sum or Contract Time.

8.2 Procedure for Determining Impact of Change Orders on Contract Amount.

8.2.1 Price before Proceeding. If Metro intends to order changes in the Work, it may request a proposal by Contractor for the proposed added or deleted Work before directing Contractor to commence Work. Within fourteen (14) days after issuance of such request by Metro, Contractor shall furnish three (3) copies of a complete breakdown of costs of both credits and additions directly attributable to the change in the Work proposed, itemizing materials, labor, taxes, effect on Contract Time, if any, and Overhead and Profit on a form approved by Metro and in accordance with the limitations described in the following Section. Subcontract Work shall be so indicated and written proposals from Subcontractors or Suppliers shall be included with similar breakdowns provided. Following

submission of its cost breakdown, Contractor shall meet with Metro to discuss all aspects of scope, costs, scheduling, and construction methods.

8.2.2 Proceed While Pricing. If Metro finds it necessary to make changes in the Work in an expeditious manner, it may direct Contractor to proceed with the change while preparing a proposal for the added or deleted Work. In such an instance, Metro may assign an estimated value to the change that Contractor shall not exceed without further authorization by Metro. Within fourteen (14) days after issuance of such by Metro, Contractor shall furnish three (3) copies of a complete breakdown of costs of both credits and additions directly attributable to the change in the Work proposed, itemizing materials, labor, taxes, effect on Contract Time, if any, and Overhead and Profit on a form approved by Metro and in accordance with the limitations described in the following Section. Subcontract Work shall be so included with similar breakdowns provided. Following submission of its cost breakdown, Contractor shall meet with Metro to discuss all aspects of scope, costs, scheduling, and construction methods.

8.2.3 Unit Prices. If the proposed additional or deleted Work is the subject of Unit Prices stated in the Contract Documents or subsequently agreed upon, such Unit Prices shall be binding upon Contractor in calculating the increase or decrease in the Contract Amount attributable to the proposed additional or deleted Work.

8.3 Limitations when Change Orders Impact Contract Amount. The following limitations shall apply in the calculation of the costs of changes in the Work:

8.3.1 Overhead and Profit.

8.3.1.1 Contractor will be permitted a reasonable allowance for Profit and Overhead on its increased Direct Cost resulting from any changes in the Work ordered by Metro. Likewise, Profit and Overhead will be deducted for any portion of the Work that is deleted. In the case of a change involving both credits and extras, Overhead and Profit shall be applied to the net extra after subtraction of credits.

8.3.1.2 Overhead and Profit for the entity performing the Work with its own crews shall not exceed ten percent (10%) of the Direct Cost of the changed Work.

8.3.1.3 Overhead and Profit for Contractor or Subcontractor who has had the Work performed by a lower tier Subcontractor shall not exceed five percent (5%) of the Direct Cost of the changed Work.

8.3.1.4 If the Work is performed by a second-tier Subcontractor, the total Overhead and Profit for all tiers shall in no event exceed twenty percent (20%) of the Direct Cost of the changed Work. Distribution of this Overhead and Profit among the tiers is the responsibility of Contractor.

8.3.2 Taxes and Insurance. Federal, state, regional, county, and local taxes, including but not limited to income taxes, excise taxes, sales and use taxes, and payroll taxes and insurance shall be shown separately, will be allowed on extras, and shall be credited on credits. No Overhead and Profit will be allowed on taxes and insurance.

8.3.3 Bond Premiums. The actual rate of bond premium as paid on the additional Direct Cost plus the cost of taxes defined in 8.3.2 will be allowed. No Overhead and Profit will be allowed on such premiums.

8.3.4 Equipment Costs. The allowance for equipment costs (both rental and Contractor-owned equipment) shall be limited to those rates in the Rental Rate Bluebook published by Dataquest Incorporated, 1290 Ridder Park Drive, San Jose, California 95131-2398, (800) 227-8444.

8.4 Force Account Work.

8.4.1 If Contractor does not respond to Metro's Request for Proposal with a cost breakdown within the fourteen (14)-day period as required above, or if Metro determines that Contractor's breakdown of costs is unreasonable in consideration of the Work proposed to be added or deleted, or if Metro determines that the proposed Work must be commenced promptly to avoid delay to the Project, Metro may issue an order for Force Account Work and Contractor shall promptly perform or delete the Work described in such order. Change, if any, in the Contract Amount due to such Force Account Work shall be the sum total of the following items:

8.4.1.1 Actual labor cost, including premium on worker’s compensation insurance and charge for social security taxes, and other taxes pertaining to labor.

8.4.1.2 The proportionate cost of premiums of public liability property damage and other insurance applicable to the extra Work involved and required by these Contract Documents.

8.4.1.3 Actual cost of material, including applicable taxes pertaining to materials.

8.4.1.4 Actual cost of plant and equipment rental, at rates to be agreed upon in writing before the Work is begun or at rates per Section 8.3.4 above. No charge for the cost of repairs to plant or equipment will be allowed. Equipment items having a capital cost of under $250.00 are considered small tools and classified as Overhead.

8.4.1.5 Overhead and Profit as provided and limited in Section 8.3.

8.4.1.6 The proportionate actual costs of premiums for bonds required by these Contract Documents.

8.4.2 Whenever any Force Account Work is in progress, each working day Contractor shall furnish to Metro a detailed written report signed by Contractor and Project Manager of the amount and cost of all of the items listed in (1) through (6) above, and no claim for compensation for such extra Work will be allowed unless such report shall have been made. Metro reserves the right to provide such materials as it may deem expedient, and no compensation, overhead, or profit will be allowed to Contractor for such materials.

8.5 Contractor Proposals for Changes in Work.

8.5.1 Generally. At any time during the performance of the Work, Contractor may propose to Metro changes in Work that Contractor believes will result in higher quality Work, improve safety, shorten the Contract Time, decrease the Contract Amount, or otherwise result in better or more efficient Work.

8.5.2 Purpose. Metro encourages Contractor to submit Value Engineering Change Proposals ("VECPs") in order to avail Metro of potential cost savings that may result. Contractor and Metro will share any savings, computed in accordance with this Section 8.5. Contractor is encouraged to submit VECPs whenever it identifies an area that can be improved, using the format described herein.

8.5.3 Application. This clause applies to a Contractor-developed and documented VECP that: (1) requires a change to this Contract to implement the VECP, and (2) reduces the Contract Price without impairing essential functions or characteristics of the Work, provided it is not based solely on a change in specified quantities.

8.5.4 Documentation. At a minimum, the following information shall be submitted by Contractor with each VECP: (1) description of the existing requirements of the Contract Documents that are involved in the proposed change; (2) description of the proposed change; (3) discussion of differences between existing requirements and the proposed change, together with advantages and disadvantages of each changed item; (4) itemization of the requirements that must be changed if the VECP is accepted (e.g., drawing numbers and Specifications); (5) justification for changes in function or characteristics of each such affected item and effect of the change on the performance of the end item; (6) effect of proposed change on life-cycle costs, including operation and maintenance, replacement costs, and life expectancy; (7) date or time by which a Change Order adopting the VECP must be issued in order to obtain the maximum cost reduction, noting any effect on Contract Time or delivery schedule; and (8) cost estimate for existing Contract requirements correlated to its lump sum breakdown and proposed changed requirements. Costs of development and implementation by Contractor shall be identified. Estimated Metro costs (e.g., cost of testing and redesign) shall also be identified.

8.5.5 Submission. Proposals will be processed expeditiously; however, Metro will not be liable for any delay in acting upon any proposal submitted pursuant to this clause. Contractor shall have the right to withdraw, in whole or in part, any VECP at any time prior to acceptance by Metro.

8.5.6 Acceptance. Metro may accept, in whole or in part, by Change Order, any VECP submitted pursuant to this clause. Until a Change Order is issued, Contractor shall remain obligated to perform in accordance with this Contract. The decision as to acceptance or rejection of any VECP will be at the sole discretion of Metro and will be final and not subject to review by mediation or otherwise.

8.5.7 Sharing. If a VECP submitted by Contractor pursuant to this clause is accepted, Contractor shall proceed with the change and the Contract Price will be adjusted in accordance with the following provisions:

8.5.7.1 Definitions:

8.5.7.1.1 Estimated Gross Savings to Contractor ("GS"): The difference between cost of performing the Work according to the existing requirement and the cost if performed according to the proposed change. In each instance, Contractor's profit shall not be considered part of the cost.

8.5.7.1.2 Contractor Costs ("CC"): Reasonable costs incurred by Contractor in preparing the VECP and making the change such as cancellation or restocking charges where required.

8.5.7.1.3 Estimated Net Savings to Contractor ("NS"): GS less CC.

8.5.7.1.4 Metro's Costs ("OC"): Reasonable costs incurred by Metro for evaluating and implementing the VECP, such as testing and redesign, where required.

8.5.7.2 Calculations:

8.5.7.2.1 The Contract Price shall be reduced by an amount equal to 70 percent of NS plus 50 percent of OC.

8.5.7.2.2 Contractor's profit will not be reduced by application of the VECP.

8.5.8 Subcontracts. Contractor shall include appropriate value engineering incentive provisions in all subcontracts of $25,000 or greater. Contractor may include such provisions in any agreement. Subcontracts shall contain a provision that any benefits accruing to Contractor as a result of an accepted VECP initiated by a

Subcontractor shall be shared by Contractor and Subcontractor. To compute any adjustment in the Contract Price under Section 8.5.7.2 above, Contractor's costs of preparation and charge for a VECP shall include any preparation and change costs. Examples are cancellation or restocking charges, when required.

8.6 Impact of Authorized Changes in the Contract. Changes in the Work made pursuant to this Article and extensions of the Contract Time allowed by Metro due to such changes shall not in any way release any warranty or promises given by Contractor pursuant to the provisions of the Contract Documents, nor shall such changes in the Work relieve or release the sureties of bonds executed pursuant to said provisions. The sureties, in executing such bonds, shall be deemed to have expressly agreed to any such change in the Work and to any extension of Contract Time made by reason thereof.

ARTICLE 9
PAYMENTS AND COMPLETION

9.1 Scope of Payment. Payment to Contractor of the Contract Amount for performing all Work required under the Contract, as adjusted for any Change Orders approved as hereinbefore specified, shall be full compensation for furnishing all labor, materials, equipment, and tools necessary to the Work, and for performing and completing, in accordance with these Contract Documents, all Work required under the Contract, and for all expenses incurred by Contractor for any purpose in connection with the performance and completion of said Work. Whenever it is specified in the Contract that Contractor is to do Work or provide materials of any class for which no price is fixed in the Contract, Contractor will do such Work or provide such materials without extra charge or allowance or direct payment of any sort, and that the cost of doing such Work or providing such materials is included in its Bid or Proposal.

9.2 Schedule of Values.

9.2.1 Generally. Within fifteen (15) days after the Notice to Proceed, Contractor shall submit a detailed breakdown costs itemized per Construction Specification Institute division format. The format and detail of the breakdown shall be as directed by Metro. This breakdown shall be referred to as the Schedule of Values.

9.2.2 Review of Schedule of Values. Metro will review the Schedule of Values to ascertain that the dollar amounts of the Schedule of Values are in fact fair cost allocations for the Work item listed. Upon concurrence by Metro, a formal approval of this Schedule of Values will be issued. Metro shall be the sole judge of fair cost allocations. Contractor's monthly progress payment requests shall reflect the cost figures included in the approved Schedule of Values and shall be based on completed Work items or percentages of Work items completed prior to the end of the payment period as more fully described below.

9.3 Progress Payment Procedure.

9.3.1 Generally. Subject to the approval of Metro, disbursements shall be made by Metro of progress payments upon written request of Contractor and pursuant to the Contract Documents as specified in Section 9.3.2.

9.3.2 Before the end of each calendar month, Contractor shall file with the Project Manager in duplicate on a form approved by Metro, a proposed payment estimate for the period commencing on the 26th day of the previous month through midnight on the 25th day of the calendar month in question. Metro and the Architect shall review Contractor's estimate and shall determine the value of Contractor's Work based on the Schedule of Values and incorporated labor and materials for the payment period. Contractor shall not be paid for any Work that is, in Metro's opinion, defective or improper, or for Work needed to correct Contractor's defective or improper Work. Contractor shall be paid 95 percent (95%) of the determined value of Work accomplished, less any offset or withholding of sums by Metro allowed under the Contract Documents, within thirty (30) days after receipt by Metro of Contractor's payment estimate. Metro will routinely withhold five percent (5%) as Retainage. No inaccuracy or error in any monthly progress payment estimates shall operate to release Contractor or its surety from damages arising from such Work or from the enforcement of each and every provision of the Contract Documents, and Metro shall have the right subsequently to correct any error made in any estimate for progress payments.

9.3.3 Retainage.

9.3.3.1 Metro will withhold Retainage from each payment at a rate of five percent (5%) in accordance with ORS 279C.570.

9.3.3.2 All funds retained by Metro under this Section shall be retained in a fund by Metro and paid in accordance with ORS 279C.550 to 279C.580.

9.3.3.3 Contractor may elect to deposit bonds or securities of the type described below with Metro or in any bank or trust company to be held in lieu of the cash Retainage described above and for the benefit of Metro. In such event, Metro shall reduce the Retainage in an amount equal to the value of the bonds and securities

and shall pay the amount of the reduction to Contractor in accordance with ORS.279C.570. Interest on such bonds or securities shall accrue to Contractor. Bonds and securities deposited or acquired as described above shall be of a character approved by the Metro Director of Finance & Regulatory Services including but not limited to:

9.3.3.3.1 Bills, certificates, notes, or bonds of the United States.

9.3.3.3.2 Other obligations of the United States or its agencies.

9.3.3.3.3 Obligations of any corporation wholly owned by the federal government.

9.3.3.3.4 Indebtedness of the Federal National Mortgage Association.

9.3.3.4 Contractor may elect to require Metro to deposit the accumulated Retainage in an interest bearing account in a bank, savings bank, trust company, or savings association for the benefit of Metro. Interest on such an account shall accrue to Contractor.

9.3.3.5 If Metro incurs additional costs as a result of Contractor's exercise of any of the above-described options, Metro may recover such costs from Contractor by reduction of the Final Payment. Metro shall inform Contractor of all such accrued costs.

9.3.4 Payment for Material Stored Off Site. Payment for material stored off of the Site will not be allowed unless the payment for such material benefits Metro in terms of lead time, scarcity, schedule, etc. Metro has sole discretion as to what materials will be paid for in advance of delivery to or installation on Site. Proof of off-site material purchases (invoice or checks and photo documentation) and appropriate insurance coverage will be required for payment. Title to all equipment and materials shall pass to Metro upon payment therefore or incorporation into the Work, whichever shall first occur, and Contractor shall prepare and execute all documents necessary to effect and perfect such transfer of title. Contractor must provide to Metro written consent from Contractor's surety approving the advanced payment for materials stored off-site. The maximum prepayment allowed by Metro shall be 75 percent of the actual fair market value of the item being considered. Metro shall be the sole judge of fair market value. Contractor shall protect stored materials from damage, and damaged or otherwise unacceptable materials, even though paid for, shall not be incorporated into the Work.

9.3.5 Other Conditions Precedent to Payment.

9.3.5.1 It is a condition precedent to Contractor's rights to any payments under the Contract that all bills for labor and materials, including labor and materials supplied by or to Contractor, shall have been paid in full and, if requested by Metro, Contractor shall submit receipted invoices and/or lien waivers, as evidence of payment in full of all such accounts. As a further condition precedent to Contractor's right to any payments under this Contract, Contractor shall submit a claims release before any payment in the form set forth in Exhibit 3 to these General Conditions, and a final claims release stating Contractor has been paid in full prior to the Final Payment in the form set forth in Exhibit 4 to these General Conditions.

9.3.5.2 Payments to Contractor shall be conditioned upon Contractor complying with all provisions of this Contract regarding scheduling and progress reports submissions and upon Contractor furnishing all other information and data necessary to ascertain actual progress. Metro's determination that Contractor has failed or refused to furnish the required information, data, schedules, or other reports shall constitute a basis for withholding all payments until the required information, data, revised schedules, and diagrams, if necessary, and other reports are furnished.

9.3.6 Payment Does Not Imply Acceptance of Work. The granting of any progress payment, or the receipt thereof by Contractor, shall not constitute acceptance of the Work or any portion thereof, and shall in no way lessen the liability of Contractor to replace unsatisfactory Work or material, though the unsatisfactory character of such Work or material may or may not have been apparent or detected at the time such payment was made.

9.3.7 Offset of Sums Due Metro from Contractor. In addition to any retention rights allowed Metro under this Contract, it is mutually understood and agreed that Metro may, upon prior written notice to Contractor, offset from any payment otherwise due Contractor as much as may be necessary to protect and compensate Metro from any costs or expenses it may incur due to any breach of the Contract by Contractor, including applicable liquidated damages. Any sums so offset shall become the property of Metro.

9.4 Substantial Completion.

9.4.1 Metro is also entitled to occupy or use all or a portion of the Work on Substantial Completion. Occupancy or use on Substantial Completion does not constitute Metro's acceptance of the Work not complying with the requirements of the Contract Documents, nor does it waive rights Metro has to completion of the Contract in accordance with the requirements of the Contract Documents.

9.4.1.1 When Contractor considers the Work to be substantially complete, Contractor shall submit to Metro a written notice that the Work is substantially complete

9.4.2 Within a reasonable time after receipt of such notice, Metro and Architect will review the Work, including a physical inspection, to determine the status of completion. Should the Architect and Metro determine that the Work is not substantially complete:

9.4.2.1 The Project Manager will promptly notify Contractor in writing, giving the reasons therefore.

9.4.2.2 The Contractor shall remedy the deficiencies in the Work, and thereafter send a second written notice of Substantial Completion to Metro.

9.4.3 The above-described procedure shall be followed until the Work is, in the opinion of Metro and Architect, substantially complete. At that point:

9.4.3.1 The Architect will prepare a Certificate of Substantial Completion on AIA Document G704, accompanied by the approved Punch List of items to be completed or corrected as verified and amended by the Architect.

9.4.3.2 Metro shall submit the Certificate of Substantial Completion to Contractor for signature.

9.4.4 Punch List. When the Work is substantially complete, the Contractor shall prepare a Punch List of items to be completed or corrected for review and approval by Metro and the Architect. The Architect shall be responsible for preparing the final Punch List. The Contractor remains responsible to complete the Work in accordance with the Contract Documents regardless of whether an item is omitted from the Punch List.

9.4.4.1 The Contractor is required to proceed promptly to complete the items on the Punch List and any other items that may be discovered to be incomplete or incorrect regardless of whether they are on the Punch List or not. If the Contractor fails to complete the Punch List within 30 days or such other time as Project Manager may allow, Metro may terminate any further services of the Contractor under the Contract and complete the Punch List items remaining to be completed or corrected with Metro's own forces or by hiring another Contractor to perform the Punch List Work. Costs of performing the Punch List Work by Metro will be deducted from any payments otherwise due the Contractor.

9.4.4.2 The Contractor will notify Metro when the Punch List Work is complete, and Final Payment will then be made in accordance with. After receipt of that Notice, Metro will inspect the Work to determine whether the Punch List is complete as provided in Section 9.5 of these General Conditions.

9.4.4.3 If the Work is not complete despite the Contractor's notice that the Punch List items are complete, and Metro has hired an Architect or Engineer to assist it on the Project, the Contractor will pay costs for the Architect's or Engineer's services if more than two inspections of the Work are required because the Punch List remains incomplete.

9.4.4.4 On Substantial Completion, Metro will be responsible for utilities, insurance, security, maintenance, and damage to Work caused by Metro's agents and employees unless otherwise provided in the Certificate of Substantial Completion. The Contractor remains responsible for damage to Work caused by its Subcontractors, agents, and employees during the performance of Punch List Work.

9.5 Final Completion and Acceptance.

9.5.1 When Contractor considers the Work to be finally complete, Contractor shall submit written certification to Metro that:

9.5.1.1 Contract Documents have been reviewed.

9.5.1.2 Work has been inspected for compliance with Contract Documents.

9.5.1.3 Work has been completed in accordance with Contract Documents to include submission of record documents.

9.5.1.4 Equipment systems have been tested in the presence of Metro and are operational.

9.5.1.5 Work is ready for final inspection.

9.5.2 Architect and Metro will promptly review the Work and include a physical inspection to verify the status of completion and shall inform Metro of the conclusions. Metro shall, within fifteen (15) days after receipt of Contractor's certification, either accept the Work or notify Contractor of the Work yet to be performed on the Contract as outlined below.

9.5.3 Should the Architect and Metro consider that the Work is incomplete or defective:

9.5.3.1 Project Manager or the Architect will promptly notify Contractor in writing, listing the incomplete or defective Work.

9.5.3.2 Contractor shall take immediate steps to remedy the stated deficiencies, and send a second written certification to Metro that the Work is complete. Metro will then advise the Architect.

9.5.3.3 Architect and Metro will review and re-inspect the Work.

9.5.4 The procedure set forth in Section 9.5.3 shall be followed until the Work is, in the opinion of Metro and Architect, finally complete. Contractor shall immediately thereafter prepare and submit Closeout Submittals as described below.

9.6 Closeout Submittals. Contractor shall submit the following items, as applicable, with its request for Final Payment:

9.6.1 Evidence of Compliance with Requirements of Governing Authorities.

9.6.2 Project record documents in accordance with the Specifications.

9.6.3 Operation and maintenance data in accordance with the Specifications.

9.6.4 Warranties in accordance with requirements of various Specification sections and these General Conditions.

9.6.5 Extra stock and maintenance materials. Contractor shall submit receipts, signed by Metro, for the various specific items.

9.6.6 Evidence of payment and release of claims in accordance with the following section.

9.6.7 Consent of surety to Final Payment.

9.6.8 Certificates of insurance for products and completed operations in accordance with Article 12 of these General Conditions.

9.6.9 If Contractor is a non-resident bidder or proposer, complete documentation of Contractor's compliance with ORS 279A.120.

9.7 Releases. Contractor and each assignee under any assignment in effect at the time of Final Payment shall execute and deliver, at the time of application for Final Payment, as a condition precedent to Final Payment, discharging and releasing Metro and the Architect of and from all liabilities, obligations, and claims arising under this Contract. The Final Release shall be in the form attached as Exhibit 4 to these General Conditions. In addition to the above-described release, Contractor shall:

9.7.1 Submit to Metro an affidavit certifying that Contractor has paid all federal, state and local taxes including excise, use, sales, and employee withholding taxes.

9.7.2 Deliver to Metro written releases of all rights to file claims against Metro or to file claims on any bonds in connection with the Contract, signed by each Subcontractor and Supplier who performed labor or furnished materials in connection with the Work. The release shall be in the form attached as Exhibit 5 to these General Conditions.

9.7.3 Deliver to Metro Contractor's written undertaking, with sureties acceptable to Metro:

9.7.3.1 To promptly pay and obtain a release of claims on any bonds that may in the future affect the premises; and

9.7.3.2 To defend, indemnify, and save Metro harmless from any liability or expense because of any claim on any bond or any other claim related to the Contract or the Work.

9.8 Final Payment. Upon application of Contractor and Contractor's completion of and compliance with all of the provisions of the above Sections and settlement of all claims arising from the Contract, including claims that Metro may have against Contractor, Metro shall pay Contractor the balance of the Contract Amount subject to the availability of monies and less any previous payments, offsets, and withholdings allowed Metro under this Contract, and Retainage that has been returned to Contractor. Acceptance of Final Payment by Contractor shall constitute a waiver of all claims of whatever nature that Contractor may have or allege to have against Metro arising out of or related to Work described in the Contract Documents.

9.9 No Waiver of Rights. Neither the final review by Metro, nor any order or certificate for the payment of money, nor any payment for, nor acceptance of the whole or any part of the Work by Metro, nor any extension of time, nor any position taken by Metro shall operate as a waiver of any provision of this Contract or of any power herein reserved by Metro or any right to damage herein provided, nor shall any waiver of any breach of this Contract be held to be a waiver of any other or subsequent breach. All of Metro's remedies provided in this Contract shall be taken and construed as cumulative; that is, in addition to each and every other remedy herein provided; and Metro shall have any and all equitable and legal remedies that it would in any case have.

ARTICLE 10
SAFETY, USE OF SITE, AND PROTECTION OF THE WORK

10.1 Laws and Regulations.

10.1.1 The Contractor must comply with all federal, state, and municipal laws in regard to all matters concerning this Contract. This includes but is not limited to compliance with the ADA. The Contractor must also

comply with the orders, rulings, decrees, and decisions of any administrative or judicial officials that in any manner whatsoever affect the Project, the Work, the safety of persons around the Work Site, or the manner in which the Work is performed.

10.1.2 If the Contractor observes that any portion of the Work is to be performed in a way that violates any law, code, or regulation, it must immediately notify Metro in writing.

10.1.3 Contractor will divert a minimum of 85% of all construction and demolition waste to recycling and reuse markets, and, if the Work is performed in the City of Portland, comply with City of Portland Code 17.102.270 and related administrative rules.

10.2 Safety Requirements.

10.2.1 Safety Generally.

10.2.1.1 Contractor shall be solely and completely responsible for the safety of the Work and the Site, including but not limited to the safety of all persons and property involved in the Work at the Site at any time until Final Completion and Acceptance of the Work.

10.2.1.2 All Work shall be performed in full accordance with all applicable safety codes, laws, ordinances, and requirements including but not limited to the Safety and Health Regulations for Construction promulgated by the Secretary of Labor under Section 107 of the Contract Work Hours and Safety Standards Act as set forth in Title 29 of the Code of Federal Regulations, federal and state OSHA, Metro's insurance standards, and all other applicable safety codes. Where any of these are in conflict, the more stringent requirement shall be followed. Contractor's failure to thoroughly familiarize itself with the aforementioned safety provisions shall not relieve it from any requirements in the Contract Documents to comply with such safety provisions or from any penalties for failure to so comply.

10.2.1.3 Contractor shall inspect the Work and the Site daily and immediately correct any unsafe conditions. All job personnel shall be knowledgeable of and comply with the above safety requirements.

10.2.1.4 Contractor shall take all precautions to prevent the possibility of fire resulting from Contract operations. Contractor shall provide properly maintained emergency fire extinguishing equipment of a readily available type and quantity as necessary to meet potential fire hazards.

10.2.1.5 In an emergency affecting safety of persons or property, the Contractor shall act to prevent the threatened damage, injury, or loss and immediately notify Metro.

10.2.2 Health and Safety Program. Contractor shall develop, publish, and implement the overall Health and Safety Program for the Project. This Program shall conform to all applicable codes. Contractor shall submit the written Health and Safety Program to Metro for review and comment within fourteen (14) days after the receipt of the written Notice To Proceed. The Program, as approved by Metro, shall subsequently be distributed to and implemented by Contractor's personnel, as well as its Subcontractors and Suppliers. Contractor shall fully implement and comply with the approved Safety Program.

10.2.3 Health and Safety Officer. Prior to initiation of construction, Contractor shall designate in writing a Site Health and Safety Officer who shall be responsible for coordinating Contractor's Health and Safety Program. The individual so designated shall be the interface with the Project Manager on matters relating to safety and Contractor's compliance with the approved Safety Program. Metro reserves the right to accept or reject the Health and Safety Officer designated by Contractor.

10.3 First Aid.

10.3.1 Contractor shall maintain on the Site during Work operations, a member of its work force who is qualified in administering first aid to its personnel and shall have available in its job office the first aid equipment as required to meet all applicable safety codes. The names and credentials of qualified personnel will be submitted to the Project Manager.

10.3.2 Contractor shall require or provide adequate clothing and protective gear for all personnel working on the job Site. This includes but is not limited to hard hats, substantial boots or shoes, shirts with sleeves at all times, eye and ear protection, gloves, face masks, welding hoods, and safety belts as required for the type of Work being done.

10.4 Use of Site.

10.4.1 The Contractor shall confine operations at the Site to areas permitted by applicable laws, statutes, ordinances, codes, rules and regulations, and lawful orders of public authorities and the Contract Documents, and shall not unreasonably encumber the Site with materials or equipment.

10.4.2 Prior to commencement of the Work, the Contractor shall review the Project Site with Metro in detail and identify the area of the Work, staging areas, connections or interfaces with existing structures and operations, and restrictions on the Project Site area. The Contractor will ensure that all forces on the Project Site are

instructed about the acceptable working and staging areas and restrictions on use of the Site. The Contractor, with advance consent of Metro, will erect such barriers, signage, and devices as are necessary to restrict access to the Project Site to approved personnel and to prevent unauthorized access by construction personnel to non-Work areas.

10.4.3 The Contractor and its Subcontractors shall receive prior approval from Metro before delivering or storing any materials or tools on Metro's premises. Upon approval, materials and tools will be stored so that they do not hamper the operation of equipment or persons and do not present a fire or safety hazard.

10.4.4 Contractor and its Subcontractors shall not erect on the Project Site any signage intended to advertise or promote their business without the prior written consent of Metro.

10.4.5 If the Contractor removes Metro's property, fixtures, materials, or other equipment to perform the Work, the Contractor shall be responsible for the safekeeping of all such property, fixtures, materials, or other equipment including without limitation assuring that such items are not lost, damaged, or destroyed, and are upon Metro's directive are either returned to their original location, reinstalled, replaced, or repaired as necessary.

10.4.6 When all or a portion of the Work is suspended for any reason, the Contractor shall securely fasten down all coverings and protect the Work, as necessary, from damage by any cause

10.4.7 At completion of the Work, the Contractor shall remove waste materials, rubbish, the Contractor's tools, construction equipment, machinery, and surplus material from and about the Project, and shall return any damage or altered portion of Metro's property to at least its pre-construction condition.

10.5 Protection of Work, Persons, and Property Against Damage.

10.5.1 Contractor shall protect the Work from damage due to construction operations; the action of the elements, including erosion due to normal and extraordinary weather conditions; the carelessness of other contractors; vandalism; or any other cause whatever until Final Completion and acceptance of the Work.

10.5.2 The Contractor will keep the Project Site safe in compliance with applicable law. Safety includes but is not limited to: (1) providing approved types of secured and adequate barricades or fences that are easily visible from a reasonable distance around open excavations; (2) closing up or covering with steel plates all open excavations at the end of each Working Day in all street areas and in all other areas when it is reasonably required for public safety; (3) marking all open Work and obstructions by lights at night; (4) installing and maintaining all necessary signs, lights, flares, barricades, railings, runways, stairs, bridges, and facilities; (5) observing any and all safety instructions received from Project Manager; and (6) following all laws and regulations concerning worker and public safety. If the law requires greater safety obligations than those imposed by Metro, the Contractor must comply with the law.

10.5.3 The Contractor will protect, and take every reasonable precaution to avoid damage to, all public and private property that might be damaged by its operations.

10.5.4 If public or private property, or both, is damaged by the Contractor's operations, the Contractor must either repair the damage or have the damage repaired by others at its own expense, without additional compensation from Metro. The repair must bring the damaged property back to the same condition it was in before the damage occurred. If repair and restoration is not feasible, the Contractor will pay Metro for the full cost of the damage. If the damage has been caused to property of Metro, Metro has the right to determine whether or not the property will be repaired and restored by the Contractor. If Metro elects to have the property repaired with its own forces or by another entity, the Contractor will pay Metro all costs associated with that repair and restoration.

10.5.5 The Contractor must give reasonable Notice to Metro and occupants of property adjacent to the Work to permit them to remove vehicles, trailers, and other possessions, as well as salvage or relocate plants, trees, fences, sprinkler systems, or other improvements in the Easement or Right-of-Way that are designated for removal or that might be destroyed or damaged by the Contractor's operations.

10.5.6 All federal, state, and local safety and environmental protection laws, rules, and orders, including fire codes, applicable to the Work to be done under the Contract, shall be obeyed, complied with, and enforced by Contractor.

10.5.7 Contractor shall provide and maintain such guards, fences, barriers, signs, regulatory and warning lights, and other traffic control and safety devices adjacent to and on the Site as may be necessary to prevent accidents to the public and damage to property. Contractor shall also provide, place, and maintain such lights as may be necessary for illuminating the said signs, guards, fences, barriers, and other traffic and safety control devices.

10.5.8 Upon Final Completion and Acceptance of the Work, Contractor shall remove all temporary signs, lights, barriers, etc., from the Site.

10.5.9 The Contractor must protect worksites and storage and disposal areas from washouts and erosion, and take all necessary precaution to control or abate dust, nuisances, and air pollution arising from the performance of Work by taking necessary actions to prevent this. Such actions include but are not limited to cleaning

up, sweeping, sprinkling, covering, enclosing, or sheltering Work areas and stockpiled materials, and removing promptly from paved areas earth or other materials that may become airborne or that may be washed into waterways or drainage systems.

10.6 Utilities.

10.6.1 The Contractor is responsible for locating light and power poles, underground electrical, underground communication, sewer, gas, and water piping, gas/water "shut off" boxes and covers, and all other utility lines. The Contractor will follow rules adopted by the Oregon Utility Notification Center. Those rules are set forth in the Oregon Administrative Rules. Copies of these rules may be obtained by contacting the Center. If the Contractor has questions about the rules, it is to contact the Center. The Parties agree that any Project plans or permits issued by Metro are deemed to have this language incorporated by reference.

10.6.2 The Contractor will give Notice to Metro of any intended excavation it may have at least 48 hours in advance of the proposed excavation. If the intended excavation or other work would cause any interruption in utility service, the Contractor will give notice to Metro at least five (5) days in advance. The specific schedule for all interruptions in utility services must be coordinated with the Project Manager.

10.6.3 The Contractor will maintain any markings showing the presence of underground facilities. If the Contractor does not maintain such markings, and Metro is required to reestablish them, the Contractor will pay Metro any and all costs associated with that activity.

10.6.4 The Contractor will exercise special care in executing subsurface work in proximity of known subsurface utilities, improvements, and easements. The Contractor will arrange for and pay the cost of disconnecting, removing, relocating, capping, replacing, or abandoning all public and private utilities impeding construction operations, all in accordance with servicing utilities' regulations and governing codes. The Contractor will cap abandoned utilities. The Contractor will provide maintenance of all on-site active above-grade and below-grade services. Any utilities damaged by Contractor shall be repaired immediately to Owner's satisfaction.

10.7 Hazardous Substances Encountered During Construction and Other Environmental Laws.

10.7.1 With respect to Hazardous Materials to be used during the course of the Work, the Contractor will implement and enforce a program to inventory and properly store and secure all Hazardous Materials that may be used or may be present on the Project Site, maintain available for inspection at the Project Site all material safety data sheets, and comply with all regulations required by law for the storage, use, and disposal of Hazardous Materials. The program must provide for notification of all personnel of potential chemical hazards. Review of these hazards must be included in the Contractor's safety training program. The Contractor will submit to Metro a list of all Hazardous Materials to be brought by the Contractor or its Subcontractors onto Metro's property, including the purpose for their use on the Project.

10.7.2 In the event of a release or discovery of a preexisting release of Hazardous Materials, or if it is foreseeable that injury or death to persons may occur because of any material or substance (including without limitation Hazardous Materials) encountered on the Project Site, the Contractor must **immediately** (1) stop the Work or the portion of the Work affected, (2) notify Metro and the Architect orally and in writing, and (3) protect against exposure of persons to the Hazardous Materials. The Contractor is to provide all written warnings, notices, reports, or postings required at law or by contract for the existence, use, release, or discovery of Hazardous Materials.

10.7.3 With respect to any Hazardous Materials or other material or substance reported to Metro under Section 10.7.2 above that were not introduced to the Project Site by the Contractor or its Subcontractors of any tier, Metro will obtain the services of a qualified environmental consultant to verify the presence or absence of the material or substance reported by the Contractor and, if the material or substance is found to be present, to verify that it is rendered harmless. Unless otherwise required by the Contract Documents, Metro will furnish in writing to the Contractor and Architect the names and qualifications of persons or entities that are to perform tests verifying the presence or absence of such material or substance, or that are to perform the task of removal or safe containment of such material or substance. The Contractor and the Architect will promptly reply to Metro in writing, stating whether or not either has reasonable objection to the persons or entities proposed by Metro. If either the Contractor or the Architect has an objection to a person or entity proposed by Metro, Metro will propose another to which the Contractor and the Architect have no reasonable objection. When the material or substance has been rendered harmless, Work in the affected area is to resume upon written agreement of Metro and the Contractor. By Change Order, the Contract Time may, subject to agreement by Metro and the Contractor, be extended appropriately and the Contract Amount will be increased in the amount of the Contractor's reasonable additional costs of shutdown, delay, and start-up, which adjustments are to be accomplished as provided in Article 8.

10.7.4 With respect to any Hazardous Materials or other material or substance reported to Metro under section 10.7.2 above that was introduced to the Project Site by the Contractor or its Subcontractors of any tier,

the Contractor will be responsible to carry out the duties of (1) proposing to Metro and the Architect a qualified environmental consultant, (2) obtaining and paying for the services of the environmental consultant, and (3) verifying that the material is rendered harmless, as otherwise set forth in Section 10.7.3 above. The Contractor will not be entitled to an increase in the Contract Amount as stated in the last sentence of Section 10.7.3 if the Contractor or its Subcontractors of any tier are responsible for the condition requiring the testing of the material and the stoppage of the Work. Remediation Work must be conducted by properly qualified contractors approved in advance by Metro. Generally, Metro may at its option contract directly with environmental consultants and remediation contractors, regardless of whether the Work will be performed at the Contractor's expense.

10.7.5 To the fullest extent permitted by law, Metro will indemnify the Contractor, Subcontractors, Architect, Architect's consultants and agents, and employees of any of them and hold them harmless from and against claims, damages, losses, and expenses, including without limitation attorney fees, arising out of or resulting from performance of the Work in the affected area if in fact the material or substance was not introduced to the Project Site by the Contractor or its Subcontractors of any tier, presents the risk of bodily injury or death, and has not been rendered harmless. No indemnification provided by Metro under this Section will be required to indemnify the Contractor, Subcontractors, or their employees or agents to the extent of liability for death or bodily injury to persons or damage to property caused in whole or in part by the Contractor's own negligence, but will require indemnity to the extent of the fault of Metro or its agents or representatives.

10.7.6 To the fullest extent permitted by law, the Contractor will indemnify Metro, the Project Manager, and employees of any of them and hold them harmless from and against claims, damages, losses, and expenses, including without limitation attorney fees, arising out of or resulting from performance of the Work in the affected area if in fact the material or substance was introduced to the Project Site by the Contractor or its Subcontractors of any tier, presents the risk of bodily injury or death, and has not been rendered harmless. No indemnification provided by the Contractor under this Section will be required to indemnify Metro or its agents or representatives to the extent of liability for death or bodily injury to persons or damage to property caused in whole or in part by Metro's own negligence, but will require indemnity to the extent of the fault of the Contractor or its agents or representatives.

10.8 Additional Requirements for Work at Metro Project Sites. The Contractor will comply with the following requirements in addition to the requirements set forth in this Article 10.

10.8.1 Safety and Health Precautions.

10.8.1.1 Contractor shall take all precautions to prevent the possibility of fire resulting from construction operations. Contractor will provide emergency fire extinguishing equipment of adequate type and quantity, readily available, and properly maintained. Contractor shall provide a fire watch and screening whenever welding is in progress in areas accessible or visible to Metro staff or the general public.

10.8.1.2 All contracted employees are expected to follow established safety procedures in the General Contractor's Safety Plan and report any safety violation or unsafe work practice to a lead worker or project manager. Violation of any safety procedure is a serious offense due to the severe consequences that may result and must be reported immediately. It is most important to report safety violations and unsafe work practices to individuals who can take immediate action to resolve the problem.

10.8.1.3 Vests and hardhats (as well as other personal protection attire as required by the General Contractor) are required to be worn at construction worksites. Contractors shall wear such vests at all times on the Project Site.

10.8.1.4 Any physical, mental, or emotional condition that may affect a Contractor or Subcontractor employee's ability to work safely, make sound judgments, or compromise their ability to react quickly in the event of an emergency, must be reported to their lead or project manager prior to the start of their shift.

10.8.1.5 For safety reasons, IPods, MP3 players, and other sound devices requiring earphones are prohibited during working hours.

10.8.1.6 The Contractor will provide warning signs, flagger(s), and other safety and health precautions that may become necessary or required for protection of Work or for protection of the public, Owner's personnel, and construction personnel, including Owner's and Architect's Representatives engaged on the Project. State of Oregon Workmen's Compensation Board Safety Codes for Construction Work and Federal Safety Codes, form a part of these Specifications.

10.8.2 Access to Metro Project Site. Contractor and Subcontractors will comply with the following requirements:

10.8.2.1 Locations for access to the Project Site by Contractor and Subcontractors shall be approved by the Project Manager.

10.8.2.2 The Contractor's representatives must always be on the premises when Subcontractors are working. Identification will be issued and worn for General Contractor's representatives.

10.8.2.3 The Contractor will keep a log of all Subcontractors that are working on-site each day. Subcontractors must always sign in with the Contractor and wear identification issued by the Contractor.

10.8.2.4 Construction on the Project Site is limited to 7 am to 5 pm, Monday through Friday, unless Work at other times is approved in advance by the Project Manager.

10.8.2.5 When Contractor needs access throughout the day to an area that is normally secured and inaccessible to visitors, the Project Manager will provide "contractor locks" and keys, and Contractor must keep said areas secure.

10.8.2.6 Contractor will ensure that all of its and Subcontractors' officers, employees, and agents are aware of and comply with the access requirements in this Section 10.8.2.

10.8.3 Site Protection/Safety.

10.8.3.1 The Project Site may be in operation and open to the public during construction of the Work. Construction Work in and around Owner's buildings occupied by Metro personnel or frequented by the public shall be conducted in such a manner as to permit such operation without jeopardy and with the absolute minimum of inconvenience to occupants and the public.

10.8.3.2 Metro may restrict hours of work to accommodate Metro activities or special events.

10.8.3.3 Construction Work that requires coordination with Metro staff activities will be planned in advance with the Project Manager. A meeting will be held with Metro staff to identify a plan for the activity.

10.8.3.4 The Contractor will take every precaution to minimize noise, spreading of dust and debris, causing undue vibrations or impacts, and other nuisances. The Contractor shall do no structural or other damage to any in-place improvements.

10.8.3.5 Metro-owned tools, vehicles, and other equipment may not be used at any time.

10.8.3.5.1 Tree/Vegetation Protection. The Contractor shall comply with the local government regulations applicable to the Project, and shall consult with the Project Manager prior to doing work that could impact the health of a tree or vegetation not scheduled for removal by contract documents.

10.8.4 Personnel and Subcontractors.

10.8.4.1 Smoking is prohibited in all areas of the Project Site except in designated smoking areas. Contractor and Project Manager to determine a designated smoking area.

10.8.5 Prejudicial remarks, actions, slurs, and jokes in the workplace that are offensive to people relative to their race, color, religion, national origin, sex, age, marital status, veteran status, disability, or sexual orientation are strictly prohibited. Sexual harassment is strictly prohibited. Contractors are expected to use a reasonable person's standard of good judgment in their working relationships. No person shall be subjected to deliberate or repeated unsolicited verbal comments, gestures, or physical contact of a sexual nature, or that which is offensive, hostile, or intimidating.

10.8.6 Restrictions:

10.8.6.1 Contractors are not allowed to bring the following items onto the Project Site:

10.8.6.1.1 Weapons

10.8.6.1.2 Alcohol, narcotics

10.8.6.1.3 Skates/Skateboards/Rollerblades/Wheelies

10.8.6.1.4 Bicycles (if a Contractor employee is commuting to the Project Site via bicycle, arrangements can be made for appropriate parking and use).

10.8.6.1.5 Pets

10.8.7 Prohibited Conduct:

10.8.7.1 The following conduct is strictly prohibited and will result in the immediate ejection of the offending Contractor employee or Subcontractor from Project Site premises:

10.8.7.1.1 Possessing, using, transferring, offering, or being under the influence of any intoxicants or narcotics during working hours.

10.8.7.1.2 Willful deceit, gross negligence, or theft, including of personal or public property.

10.8.7.1.3 Neglect of duty, violation of Metro ordinances, regulations, and directives.

10.8.7.1.4 Willful or repeated negligent violation of established safety policies and procedures.

10.8.7.1.5 Possessing a firearm, illegal weapons, fireworks, or explosive device on Metro property

10.8.7.1.6 Harassment, discourteous treatment of any kind, or discrimination to staff, volunteers, or members of the public. Obscenities, profanity, yelling, shouting, abusive, or maligning tone of voice and/or language is considered discourteous and is prohibited.

10.8.7.1.7 Misuse of Metro property.

ARTICLE 11
INDEMNIFICATION

11.1 Indemnification.

11.1.1 Contractor shall assume all responsibility for the Work and shall bear all losses and damages directly or indirectly resulting to Contractor, Metro, Architect, their officers, agents, and employees, or to others on account of the character or performance of the Work or accidents.

11.1.2 Contractor shall defend, indemnify, and hold harmless Metro, its officers, agents, and employees from all claims, liability, loss, damage, consequential or otherwise, and injury of every kind, nature, and description, directly or indirectly resulting from activities in the performance of the Contract, the ownership, maintenance, or use of motor vehicles in connection therewith, or the acts, omissions, operations, or conduct of Contractor or any Subcontractor or Supplier under the Contract in any way arising out of the Contract, irrespective of whether fault is the basis of the liability or claim.

11.1.3 Any specific duty or liability imposed or assumed by Contractor, as may be otherwise set forth in the Contract Documents, shall not be construed as a limitation or restriction of the general liability or duty imposed upon Contractor by this Section.

11.1.4 Such liabilities and losses from which Contractor shall indemnify and hold harmless the above-described indemnities shall include but not be limited to:

11.1.4.1 Special activities by Metro to verify and/or expedite delivery of materials and those losses incurred by Metro as a result of any delays to Other Metro Contractors resulting from acts of Contractor or its failure to act.

11.1.4.2 Acceleration payments to Other Metro Contractors on the Project or related projects resulting from Contractor falling behind the Construction Schedule for causes not entitling it to an extension of Contract Time under any provisions of the Contract Documents that cause other Metro Contractors to fall behind the Construction Schedule so that they must then accelerate the performance of the Work, as directed by Metro, in order to maintain progress.

11.1.4.3 Violations of the ordinances or regulations of Metro, any federal, state, county, or city laws or order of any properly constituted authority in any manner affecting this Contract, in addition to any laws or regulations that might affect this Contract.

11.1.5 Any and all suits, actions, damages, or claims of every name and description to which the above-indemnified may be subjected or put by reason of injury to persons or property arising out of, in connection with, or incident to the execution of the Work, or resulting from acts or omissions on the part of Contractor, its Subcontractors, officers, employees, or agents, and all attorney fees and court costs incident thereto.

11.1.6 No indemnification provided by the Contractor under this Article 11 or insurance provided under Article 12 will be required to indemnify Metro or its employees or agents to the extent of liability for death or bodily injury to persons or damage to property caused in whole or in part by their own negligence, but will require indemnity to the extent of the fault of the Contractor or those entities or persons for whom the Contractor is responsible.

ARTICLE 12
INSURANCE

12.1 General Insurance Requirement. The Contractor will purchase from and maintain in a company or companies lawfully authorized to do business in the State of Oregon such insurance as will protect the Contractor from claims set forth below that may arise out of or result from the Contractor's operations and completed operations under the Contract and for which the Contractor may be legally liable, whether such operations be by the Contractor or by a Subcontractor, or by anyone directly or indirectly employed by any of them, or by anyone for whose acts any of them may be liable:

12.1.1 Claims under workers' compensation, disability benefit, and other similar employee benefit acts that are applicable to the Work to be performed;

12.1.2 Claims for damages because of bodily injury, occupational sickness or disease, or death of the Contractor's employees;

12.1.3 Claims for damages because of bodily injury, sickness or disease, or death of any person other than the Contractor's employees;

12.1.4 Claims for damages insured by usual personal injury liability coverage and commercial general liability coverage (or its equivalent as approved in advance by the Owner);

12.1.5 Claims for damages, other than to the Work itself, because of injury to or destruction of tangible property, including loss of use resulting therefrom;

12.1.6 Claims for damages because of bodily injury, death of a person, or property damage arising out of ownership, maintenance, or use of a motor vehicle;

12.1.7 Claims for bodily injury or property damage arising out of completed operations;

12.1.8 Claims involving contractual liability insurance applicable to the Contractor's obligations under Article 12 of the General Conditions;

12.1.9 Claims for third-party injury and property damage (including without limitation clean-up costs) as a result of pollution conditions arising from the Contractor's operations or completed operations; and

12.1.10 Claims involving the Contractor's professional liability, solely to the extent that the Contractor accepts design or design/build responsibilities under the Contract.

12.2 Required Coverage. Without waiver of any other requirement of the Contract Documents, the Contractor will provide, pay for, and maintain in full force and effect at all times during the performance of the Work until final acceptance of the Work or for such further duration as required, the following policies of insurance issued by a responsible carrier. All of the Contractor's insurance carriers will be rated A VII or better by A.M. Best's rating service, unless otherwise approved by the Owner.

12.2.1 Workers' Compensation: Workers' compensation coverage sufficient to meet statutory liability limits.

12.2.2 Employer's Liability: The Contractor will purchase and maintain employer's liability insurance in addition to its workers' compensation coverage with at least the minimum limits in Section I.C below.

12.2.3 Commercial General Liability: The Contractor will purchase and maintain commercial general liability ("CGL") insurance on an occurrence basis, written on ISO Form CG 0001 (12/04 or later) or an equivalent form approved in advance by the Owner. CGL coverage will include all major coverage categories including bodily injury, property damage, and products/completed operations coverage maintained for at least six years following final payment. The CGL insurance will also include the following: (a) separation of insured; (b) incidental medical malpractice; and (c) per-project aggregate for premises operations.

12.2.4 Professional Liability/Errors and Omissions: To the extent that the Contractor accepts design or design/build responsibilities, the Contractor will purchase and maintain professional liability/errors and omissions insurance and cause those Subcontractors providing design services do so.

12.2.5 Automobile Liability: The Contractor will purchase and maintain automobile liability insurance with coverage for owned, hired, and non-owned vehicles on ISO form CA 00 01 or an equivalent form approved in advance by the Owner. The automobile liability insurance will include pollution liability coverage resulting from vehicle overturn and collision.

12.2.6 Pollution Liability: The Contractor will purchase a contractors' pollution liability policy. Coverage will include third-party claims for bodily injury, property damage, and environmental damage resulting from pollution conditions caused during the performance of covered operations for both on-site and migrating from the job site. Such coverage will include pollution conditions arising from covered operations including work performed by its Subcontractors and third-party claims against the Contractor alleging improper supervision of its Subcontractors.

12.2.7 Commercial Umbrella/Excess Coverage: The Contractor will purchase or maintain a commercial umbrella or excess liability policy to meet the minimum limits as described below in Section I.C. Commercial umbrella/excess liability coverage will include: (a) "Pay on behalf of" wording; (b) concurrency of effective dates with primary coverage; (c) punitive damages coverage (where not prohibited by law); (d) application of aggregate (where applicable) in primary coverage; (e) "care, custody, and control" coverage that follows the form for primary coverage; and (f) drop-down feature. Excess/umbrella coverage will be scheduled to the CGL, employer's liability, and automobile liability policies.

12.3 Limits. The insurance required by this Article 12 will be written for at least the limits of liability specified in this Section or required by law, whichever is greatest.

12.3.1 Workers' Compensation ..... Statutory Limits

12.3.2 Employer's Liability

12.3.2.1 Each Accident $1,000,000
12.3.2.2 Each Bodily Injury/Disease $1,000,000
12.3.2.3 Aggregate Bodily Injury/Disease $1,000,000

12.3.3 Commercial General Liability
12.3.3.1 Each Occurrence $2,000,000
12.3.3.2 General Aggregate $2,000,000
12.3.3.3 Product/Completed Operations $2,000,000
12.3.3.4 Personal & Advertising Injury $2,000,000
12.3.3.5 Fire Damage Limit $2,000,000
12.3.3.6 Medical Expense Limit $2,000,000

12.3.4 Automobile Liability
12.3.4.1 Combined Single Limit $2,000,000

12.3.5 Pollution Liability
12.3.5.1 Single Limit $2,000,000
12.3.5.2 Aggregate $2,000,000

12.3.6 Commercial Umbrella/Excess Coverage
12.3.6.1 Each Occurrence ***Alternates: Min. $2,000,000/$5,000,000/$10,000,000***

12.4 Additional Insureds. The Contractor's third-party liability insurance policies will include the Owner and its officers, employees, agents, volunteers, partners, successors, and assigns as additional insureds. The policy endorsement must extend premise operations and products/completed operations to the additional insureds. The additional insured endorsement for the CGL insurance must be written on ISO Form CG 2010 (11/85), a CG 2037 (07/04) together with CG 2033 (07/04), or the equivalent, but will not use the following forms: CG 20 10 (10 93) or CG 20 10 (03 94).

12.5 Joint Venture. If the Contractor is a joint venture, the joint venture will be a named insured for the liability insurance policies.

12.6 Primary Coverage. The Contractor's insurance will be primary insurance coverage and may not seek contribution from any insurance or self-insurance carried by the Owner or the Architect, including any property damage coverage carried by the Owner. Contractor's insurance will apply separately to each insured against whom a claim is made or suit is brought. The Contractor's insurance will not include any cross-suit exclusion or preclude an additional insured party from asserting a claim as a third party.

12.7 Contractor's Failure to Maintain Insurance. If for any reason the Contractor fails to maintain required insurance coverage, such failure will be deemed a material breach of the Contract and the Owner, at its sole discretion, may suspend or terminate the Contract for cause pursuant to Article 15 of this Contract. The Owner may, but has no obligation to, purchase such required insurance, and without further notice to the Contractor, the Owner may deduct from the Contract Sum any premium costs advanced by the Owner for such insurance. Failure to maintain the insurance coverage required by this Article 12 will not waive the Contractor's obligations to the Owner.

12.8 Certificates of Insurance. The Contractor will supply to the Owner Certificates of Insurance for the insurance policies described in this Article 12 prior to the commencement of the Work and before bringing any equipment or construction personnel onto the Project site.

12.8.1 Additional Certificates. To the extent that the Contractor's insurance coverages are required to remain in force after final payment and are reasonably available, an additional certificate evidencing continuation of such coverage will be submitted with the final application for payment. Information concerning reduction of coverage because of revised limits or claims paid under the general aggregate, or both, will be furnished by the Contractor with reasonable promptness in accordance with the Contractor's information and belief.

12.8.2 Prohibition Until Certificates Received. The Owner will have the right, but not the obligation, to prohibit the Contractor and its Subcontractors from entering the Project site until the required certificates (or other competent evidence that insurance has been obtained in complete compliance with this Article 12) are received and approved by the Owner.

12.8.3 Deductibles/Self-Insured Retentions: Payment of deductibles or self-insured retention is a Cost of the Work and does not justify a Change Order. Satisfaction of all self-insured retentions or deductibles will be the sole responsibility of the Contractor.

12.9 Subcontractor Insurance. The Contractor will cause each Subcontractor to purchase and maintain in full force and effect policies of insurance as specified in this Article 12, except that the coverage limits shall be at least $1,000,000 combined single limit for each occurrence and in the aggregate. The Contractor will be responsible for the Subcontractors' coverage if the Subcontractors fail to purchase and maintain the required insurance. When

requested by the Owner, the Contractor will furnish copies of Certificates of Insurance establishing coverage for each Subcontractor.

12.10 Limitations on Coverage.

12.10.1 No insurance provided by the Contractor under this Article 12 will be required to indemnify the Owner, the Architect, or their employees or agents to the extent of liability for death or bodily injury to persons or damage to property caused in whole or in part by their own negligence, but will require indemnity to the extent of the fault of the Contractor or its agents, representatives, or Subcontractors.

12.10.2 The obligations of the Contractor under this Article 12 will not extend to the liability of the Architect or its consultants for (a) the preparation or approval of maps, drawings, opinions, reports, surveys, Change Orders, designs, or specifications; or (b) the giving or failure to give directions or instructions to the extent that the directions, or failure to provide directions, are the cause of the injury or damage.

12.10.3 By requiring insurance, the Owner does not represent that coverage and limits will necessarily be adequate to protect the Contractor. Insurance in effect or procured by the Contractor will not reduce or limit the Contractor's contractual obligations to indemnify and defend the Owner for claims or suits that result from or are connected with the performance of the Contract.

12.11 Property Insurance

12.11.1 Builders Risk. Contractor, for the life of this Contract, shall effect and maintain Builders All Risk Insurance and fire insurance with extended coverage and malicious mischief coverage upon the structures on which the Work of this Contract is to be done to 100 percent (100%) of the insurable value thereof, protecting (1) Owner's interest; (2) Contractor's interest; and (3) the Subcontractor's interest in the Work. Contractor's interest and Subcontractor's interest, as used herein, means their property interests and the property interests of others for which they are responsible in the Project, in all materials and supplies entering into or used or destined for use therein, and in all expendable items of equipment that are used in or are incidental to but that do not become a part of the finished Project, located at the job Site at the time of loss or damage. Such insurance shall not exclude coverage for landslides, collapse, explosion, or loss due to the result of faulty workmanship. Such insurance will include coverage for soft costs or delay in opening.

12.11.1.1 Contractor and all Subcontractors shall be responsible for any loss or damage to their machinery and apparatus and nonexpendable items of their equipment.

12.11.1.2 Contractor shall provide adequate fire protection equipment and safeguards to protect Metro and Contractor's interests in accordance with Metro’s insurance carrier's requirements.

12.11.1.3 Contractor will furnish copies of Certificates of Insurance establishing coverage prior to project start.

12.11.2 Contractor's Responsibility. Contractor must provide insurance for its own machinery, tools, equipment, or supplies that are not to become a part of the Project.

ARTICLE 13
MINORITY/WOMEN/EMERGING SMALL BUSINESS PROGRAM

13.1 Contractor shall comply with all pertinent provisions of Metro's MWESB Business Program that are contained in Metro Code 2.04.100 to 2.04.190 and that are by this reference expressly incorporated herein and made a part of this Contract.

13.2 Contractor shall not replace a minority, women-owned or emerging small business enterprise Subcontractor with another Subcontractor, either before Contract Award or during Contract performance, without prior written approval of Metro. In replacing a minority, women-owned or emerging small business Subcontractor, Contractor shall replace such minority, women-owned or emerging small business Subcontractor with another certified minority, women-owned or emerging small business Subcontractor or make good faith efforts to do so. Failure to do so shall constitute Contractor's default of this Contract, and Metro, at its option, may terminate this Contract under the procedures set out in Article 15.

13.3 Metro reserves the right, at all times during the period of this Contract, to monitor Contractor's compliance with the terms of the MWESB Business Program and enforce the program if Contractor should fail to so comply. Contractor shall be bound by any and all representations made concerning its compliance with the program prior to Contract Award and any and all representations made by Contractor concerning the replacement of a minority or women-owned business Subcontractor during the performance of this Contract.

13.4 MWESB Participation in the Contract.

13.4.1 It is Metro's policy that Contractor shall take reasonable steps to ensure that Minority Business Enterprises (MBE), Women Business Enterprises (WBE), and Emerging Small Businesses (ESB) have the opportunity to participate in the Work.

13.4.2 Termination and Substitution of MWESB. The Contractor shall notify Metro in writing and confer with Metro before terminating or replacing a MWESB that has a signed contract with the Contractor.

13.4.3 Changes in Work Committed to MWESB. Metro will consider the impact on MWESB participation in instances where Metro changes, reduces, or deletes Work contracted to MWESB firms at the time of Contract Award. In such instances, the Contractor shall not be required to replace the Work but is encouraged to do so. If the Contractor proposes any changes that involve a contracted MWESB, the Contractor shall notify the MWESB of the proposed change, reduction, or deletion of any Work committed at the time of Contract Award prior to executing the Change Order. The Contractor can choose to enable the affected MWESB to participate in the Change Order request and is requested to make every effort to maintain the contracted MWESB percentage.

13.4.4 Contractor Payments to Subcontractors. The Contractor shall maintain records of all subcontracts entered into with MWESB firms and records of materials purchased from MWESB suppliers. Such records shall show the name and business address of each MWESB subcontractor or vendor and the total dollar amount actually paid to each MWESB subcontractor or vendor. The Contractor shall pay each subcontractor for satisfactory performance of its contract no later than ten (10) Calendar Days from receipt of each payment the Contractor receives from Metro. The Contractor shall also return Retainage payments to each subcontractor within ten (10) Calendar Days after the subcontractor’s work is satisfactorily completed. Any delay or postponement of payment from the above-referenced time frame may occur only for good cause following written approval of the Metro Project Manager. The Contractor shall submit a completed, signed original "Metro Monthly Subcontractor Payment and Utilization Report," available from Metro. The Contractor shall submit the form when a progress or final payment has been made to each subcontractor or supplier or when any held retainage is returned to a subcontractor or supplier. Contractor shall submit the form no later than the fifth day of each month. At the completion of the Project, Contractors shall submit a final form indicating the total amounts paid to all subcontractors and suppliers.

ARTICLE 14
MISCELLANEOUS STATUTORY RESPONSIBILITIES OF CONTRACTOR

Contractor shall keep itself fully informed of and shall fully comply with all federal, state, regional, and local laws, rules, regulations, ordinances, and orders pertaining in any manner to this Contract and those rules, regulations, and orders of any agency or authority having jurisdiction over the Work or those persons employed or engaged therein. Contractor shall pay all taxes, including federal, state, regional, county, and city, or taxes of any other governmental entity applicable to the Work performed or materials provided under this Contract.

ARTICLE 15
TERMINATION OR SUSPENSION OF THE WORK

15.1 Default of Contractor.

15.1.1 If Contractor should be adjudged bankrupt, or if Contractor should make a general assignment for the benefit of its creditors, or if a receiver should be appointed on account of insolvency, or if Contractor should refuse to or fail to supply enough properly skilled workers or proper materials for the efficient prosecution of the Work, disregard laws, ordinances, or the instructions of Metro, or otherwise be in violation of any provision of the Contract, Metro may, without prejudice to any other right or remedy and after giving Contractor and Contractor's surety on the Performance Bond prior written notice, terminate the Contract or any portion of the Contract, which termination shall be effective ten (10) days after service of such notice. Such notice shall contain the reasons for the termination and shall state that unless, within ten (10) calendar days of service of the termination notice on Contractor, Contractor or its surety on the Performance Bond shall have cured or shall have made, in Metro's opinion, appropriate arrangements for prompt cure of all of the cause(s) for termination cited in the notice of termination, the Contract shall terminate.

15.1.2 Upon termination, Metro may take possession of the premises and of all materials, tools, and appliances thereon, as well as all other materials whether on the premises or not, for which Contractor has received partial payment, and may finish the Work or the portion terminated by whatever method it may deem expedient.

15.1.3 In the event action as above indicated is taken by Metro, Contractor or Contractor's surety shall provide Metro with immediate and peaceful possession of all of the materials, tools, and appliances located on the premises, as well as all other materials whether on the premises or not, for which Contractor has received any progress payment. Upon termination, in the event that the surety does not complete the Contract, at the election of Metro, Contractor shall assign any and all subcontracts and material contracts to Metro or Metro's designee. Further,

Contractor shall not be entitled to receive any further payment until the Work is completed. On completion of the Work, determination shall be made by Metro of the total amount Contractor would have been entitled to receive for the Work under the terms of the Contract had Contractor completed the Work. If the difference between said total amount and the sum of all amounts previously paid to Contractor, which difference will hereinafter be called the "unpaid balance," exceeds the expense incurred by Metro in completing the Work, including expense for additional managerial and administrative service, and all other costs, damages, and expenses incurred by Metro due to Contractor's failure to complete the Contract, such excess will be paid to Contractor, with the consent of the surety. If, instead, the described expenses incurred by Metro exceed the unpaid balance, the amount of the excess shall be paid to Metro by Contractor or its surety. If only a portion of the Contract is terminated, this Section shall be deemed to apply to that portion of the Work only.

15.1.4 In addition to the above-mentioned right, Metro shall have the right, at its option, to suspend all or part of Contractor's performance under the Contract should any of the events occur that give Metro the right to terminate the Contract as above described. In such event, Metro shall give Contractor and Contractor's surety prior written notice of such suspension and Contractor shall stop or cause to stop all such Work under the Contract immediately on receipt of such notice and shall not commence such Work under the Contract again unless and until Contractor shall receive written notice from Metro to proceed. Metro shall not be responsible or liable to Contractor or others for any costs or expenses of whatever nature related to Contractor's failure to stop Work as directed by Metro.

15.1.5 After receipt of a notice of termination or suspension, and except as otherwise directed by Metro, Contractor shall as it relates to those portions of the Contract terminated or suspended:

15.1.5.1 Stop Work under the Contract on the date and to the extent specified in the notice of termination or suspension.

15.1.5.2 Place no further orders or subcontracts, or suspend the same, as applicable, for materials, services, or facilities except as necessary to complete the portion of the Work under the Contract that is not terminated or suspended.

15.1.5.3 Terminate or suspend, as applicable, all orders and subcontracts to the extent that they relate to the performance of such Work terminated or suspended.

15.1.6 Metro may, at its discretion, avail itself of any or all of the above rights or remedies and its invoking of any one of the above rights or remedies will not prejudice or preclude Metro from subsequently invoking any other right or remedy set forth above or elsewhere in the Contract.

15.1.7 None of the foregoing provisions shall be construed to require Metro to complete the Work nor to waive or in any way limit or modify the provisions of the Contract relating to the fixed and liquidated damages suffered by Metro on account of failure to complete the Project within the time prescribed.

15.2 Termination in the Public Interest.

15.2.1 Metro may unilaterally terminate the Contract in whole or in part for convenience, when Metro determines it to be in the public interest.

15.2.2 When Metro decides to terminate a Contract for convenience, Metro will notify the Contractor and its sureties in writing of its intention to terminate the Contractor's right to proceed with the Work no less than seven (7) days in advance of the date of the actual termination. The date of termination, which is the date after which no Work is to be performed, must be stated in the notice. Notice will be deemed to have been given if sent to the Contractor's or any surety's last known address provided to Metro by the Contractor and its sureties. For purposes of computing time in this Section, the first day counted is the day that the notice is mailed by Metro.

15.2.3 After receipt of a notice of termination, and except as directed by Metro, the Contractor will immediately proceed with the following obligations:

15.2.3.1 Stop Work by the date as specified in the notice;

15.2.3.2 Award no further subcontracts and place no further orders for materials, services, or facilities, except as necessary to complete the continued portion of the Contract, if any;

15.2.3.3 Terminate all Subcontractors and orders to the extent that they relate to the Work terminated;

15.2.3.4 Assign to Metro, if directed by Project Manager, all right, title, and interest of the Contractor under the subcontracts terminated, in which case Metro will have the right to settle or to pay any termination settlement proposals arising out of those terminations;

15.2.3.5 With approval or ratification to the extent required by Metro, settle all outstanding liabilities and termination settlement proposals arising from the termination of subcontracts; the approval or ratification will be final for purposes of this clause;

15.2.3.6 As directed by Metro, transfer title and deliver to Metro (a) the fabricated or unfabricated parts, Work in process, completed Work, supplies, and other materials produced or acquired for the Work terminated, and (b) the completed or partially completed plans, drawings, information, and other property that, if the Contract had been completed, would be required to be furnished to Metro;

15.2.3.7 Take any actions that may be necessary, or that Project Manager may direct, for the protection and preservation of the property related to this Contract that is in the possession of the Contractor and in which Metro has or may acquire an interest; and

15.2.3.8 Use its best efforts to sell, as directed or authorized by Project Manager, any property of the type referred to in Section 14.2.3.6 above, except that the Contractor (a) is not required to extend credit to any purchaser and (b) may acquire the property under the conditions prescribed by, and at prices approved by, the Project Manager. The process of any transfer or disposition will be applied to reduce any payments to be made by Metro under this Contract, credited to the price or cost of the Work, or paid in any other manner directed by Project Manager.

15.2.4 Upon termination, Metro will pay the Contractor the following costs, and no other, as a result of the termination:

15.2.4.1 With regard to the Contract Work performed before the effective date of termination, the total (without duplication of any items) of the following costs:

15.2.4.1.1 The cost of this Work, as determined by the method of payment established by the Contract Documents;

15.2.4.1.2 The cost of settling and paying termination settlement proposals under terminated subcontracts that are properly chargeable to the terminated portion of the Contract if such costs are not included in Section 14.2.3.4; and

15.2.4.1.3 A sum as profit on Section 14.2.4.1.1 above, not to exceed ten percent of that amount, unless it appears that the Contractor would have sustained a loss on the entire Contract had it been completed. No profit, however, is permitted on costs compensated under Section 14.2.4.1.2.

15.2.4.2 The reasonable costs of settlement of the Work terminated, including:

15.2.4.2.1 Accounting, clerical, and other expenses reasonably necessary for the preparation of termination settlement proposals and supporting data, except that no allowance will be made for costs incurred as attorney fees;

15.2.4.2.2 The termination and settlement of Subcontractors (excluding the amounts of such settlements); and

15.2.4.2.3 Storage, transportation, and other costs incurred reasonably necessary for the preservation, protection, or disposition of the termination inventory.

15.2.5 No costs other than those allowed in Section 14.2.4 are to be paid. By way of example only, and not by way of limitation, costs that would not be allowed include anticipated profits on unperformed Work, consequential damages, post-termination overhead, Bid or Proposal preparation costs, costs for retraining employees, depreciation on idle equipment, cost of common items reasonably usable on the Contractor's other work, and costs unrelated to the Work performed prior to the date of termination.

15.2.6 Metro may deduct from any sums otherwise due the Contractor under Section 14.2.4 above the cost of advance payments made to the Contractor under the terminated portion of this Contract, any claim that Metro has against the Contractor whether or not arising from this Contract, and the agreed price of, or proceeds of sale of, materials, supplies, or other things acquired by the Contractor or sold under the provision of Section 14.2.3.8 and not recovered by or credited to Metro.

15.2.7 Payment from Metro is not due until the Contractor has submitted an itemization of its recoverable costs to Metro in writing, together with supporting documentation. The Contractor will supply additional supporting documentation on request by Metro in order to recover its costs.

15.2.8 The Contractor will maintain all records and documents relating to the termination until Metro and the Contractor resolve the amount of costs to be paid by Metro to the Contractor as a result of this termination. Such records must be made available to Metro within thirty (30) days of the request.

END OF SECTION

Metro
600 NE Grand Ave.
Portland, OR 97232-2736
503-797-1700

MERC CONTRACT NO. 304013

METRO GENERAL CONDITIONS - EXHIBIT 1

WARRANTY FORM

We the undersigned hereby warrant that the [DESCRIBE WORK PERFORMED OR MATERIALS SUPPLIED].that we have provided for [INSERT PROJECT NAME] has been done in accordance with the Contract Documents and that the Work as provided will fulfill the requirements of the warranty included in Article 7 of the Metro General Conditions.

We agree to correct or remove and replace any or all of our Work, together with any other adjacent Work that may be displaced or affected by so doing, that may be defective in its workmanship or materials, or that may fail to conform to the requirements of the Contract Documents, within a period of one (1) year following the later of the date of substantial completion or the date described in Section 7.7 of the Metro General Conditions, without any expense whatsoever to Metro, normal wear and tear and mistreatment excepted.

In the event of our failure to comply with the above-mentioned conditions within twenty (20) calendar days after Metro notifies Contractor in writing, we collectively and separately do hereby authorize Metro to proceed to have said defects repaired and corrected at our expense, and we will honor and pay the costs to dispose of nonconforming materials and charges therefore upon demand. If Metro is required to enforce payment, it shall be entitled to recover its costs and reasonable attorney fees.

CONTRACTOR

By_____

Print Name_____

Date_____

SUBCONTRACTOR

By_____

Print Name_____

Date_____

Metro
600 NE Grand Ave.
Portland, OR 97232-2736
503-797-1700

MERC CONTRACT NO. 304013

METRO GENERAL CONDITIONS - EXHIBIT 2

SUBCONTRACTOR ASSIGNMENT OF ANTITRUST CLAIMS

Project: _____

Owner: Metro

General Contractor: _____

Subcontractor: _____

Release Date: _____

1. By entering into a contract with the General Contractor, subcontractor, for consideration paid to subcontractor under the subcontract, does irrevocably assign to Metro any claim for relief or cause of action that subcontractor now has or that may accrue to Subcontractor in the future, including at Metro's option, the right to control any such litigation on such claim for relief or cause of action, by reason of any violation of 15 USC Section 1 15, ORS 646.725, or ORS 646.730 in connection with any goods or services that are used, in whole or in part, for the purpose of carrying out subcontractor's obligations under its subcontract with the General Contractor.

2. Subcontractors irrevocably assigns to Metro, as a third-Party beneficiary of the subcontract, any right, title, or interest that has accrued or may accrue to the Subcontractor by reason of any violation of 15 USC Section 1 15, ORS 646.725, or ORS 646.730, including, at Metro's option, the rights to control any litigation arising hereunder, in connection with any goods or services provided to the Subcontractors or Suppliers by any person, in whole or in part, for the purpose of carrying out the Subcontractor's obligations as agreed to by Subcontractor in pursuance of the completion of the Contract .

3. It is an express obligation of Subcontractor that it will take no action that will in any way diminish the value of the rights conveyed or assigned hereunder to Metro. It is an express obligation of Subcontractor to advise the Office of Metro Attorney:

a. In advance, of its intention to commence any action on its own behalf regarding such claims for relief or causes of action;

b. Immediately, upon becoming aware of the fact that an action has been commenced on its own behalf by some other person or persons, of the impendency of such action; and

c. the date on which it notified the obligor(s) of any such claims for relief or causes of action of the fact of its assignment to Metro.

4. In the event that any payment under any such claim is made to Subcontractor, it shall promptly pay over to Metro its proportionate share thereof, if any, assigned to Metro herein.

SUBCONTRACTOR

By_____

Print Name_____

Date_____

Metro
600 NE Grand Ave.
Portland, OR 97232-2736
503-797-1700

MERC CONTRACT NO. 304013

METRO GENERAL CONDITIONS - EXHIBIT 3

AFFIDAVIT, AGREEMENT FOR INDEMNITY, LIEN WAIVER AND RELEASE

(General Contractor – Progress Payment)

This AFFIDAVIT, AGREEMENT FOR INDEMNITY, LIEN WAIVER AND RELEASE is entered into _____, by and between Metro, a Metropolitan Service District established pursuant to Oregon law and the Metro Charter ("Metro") and _____, (the "Undersigned") in accord with Metro Contract No. ____, dated _____, between Metro and the Undersigned for construction of _____ (the "Contract"). As a condition precedent to Metro's Progress Payment No.___ under the Contract in the amount of $_____, and in consideration thereof, the Undersigned agrees to make the following representations, warranties, covenants, agreements, and indemnities, and to fully and completely waive, release, and discharge Metro from all liabilities, obligations, and claims arising under the Contract, as follows:

1. The Undersigned hereby certifies, represents, and warrants as follows:

1.1 It has supplied labor, services, equipment, materials, and materials provided or transported to the construction of the _____ as General Contractor under the Contract (the "Project"), and has subcontracted with other persons and entities to so provide.

1.2 It has complied with all federal, state, and local laws, including social security laws, unemployment compensation laws, workers' compensation laws, and tax laws, insofar as applicable to the performance of the Contract work, and has paid all federal, state, and local taxes including excise, use, sales, and withholding taxes.

1.3 All subcontractors, laborers, service providers, equipment suppliers and material suppliers, and transporters for work, services, equipment, or materials supplied to the Project or to the Undersigned and used in the Project have been paid in full by the Undersigned through the period covered by previous progress payments made by Metro.

1.4 It either has paid in full, or within ten (10) business days of receipt of the above set forth Progress Payment, will pay in full all subcontractors, laborers, service providers, equipment suppliers and material suppliers, and transporters for work, services, equipment, or materials supplied to the Project or to the Undersigned connected with or used in the Project, through the period covered by said progress payment made by Metro.

1.5 It has delivered to Metro written releases of all rights to file claims on any bonds in connection with the Contract, signed by each subcontractor, service provider, and supplier who performed work or services, or furnished or transported materials or equipment in connection with the Contract, in accord with Article 9 of the Metro General Conditions to the Contract.

2. The Undersigned acknowledges and agrees that Progress Payments made by Metro up to the date hereof, in the sum of_____, plus Progress Payment No. _____, when paid, constitute payment in full of all amounts due to Undersigned for all labor, services, equipment, and materials provided or transported in connection with the Project up to and through _____, _____, as set forth in the Undersigned's payment application No. _____. The Undersigned agrees that, ***upon receipt of the above set forth progress payment,*** which is the full payment due and owing to Undersigned up to and through the date set forth in section 2, Undersigned will be paid in full for all labor (including contributions and benefits), services, equipment, supplies, and materials provided or transported in connection with the Project without exceptions, and that there are no other unsettled claims or demands therefore. The Undersigned agrees that, ***conditioned upon receipt of the above set forth progress payment,*** and in consideration thereof, the Undersigned hereby fully and unconditionally waives and releases Metro from all liability for payment, liens or claims of lien, rights to lien, bond claim rights, and any other claim for payment it now has or asserts or may have or assert for labor, services, equipment, materials, and materials provided or transported in connection with the Project through and up to said date, and further releases Metro, the Project land and improvements from any claim, cause of action, or demand whatsoever, arising out of or relating to the Project that arose on or before said date.

3. The Undersigned hereby agrees to promptly pay and obtain a release of claims on any bonds that may in the future affect the Project, and defend, indemnify, and save Metro harmless from any liability or expense because of any claim on any bond or any other claim related to the work under the Contract through and up to the date set forth in section 2.

4. The affiant signing below does hereby swear and attest that he/she has the full authority to sign this document on behalf of the Undersigned and that Metro may rely on this Affidavit, Agreement for Lien Waiver and Release in connection with remitting Progress Payment No. _____ to Undersigned.

Dated:_____ Affiant:_____Its:_____

STATE OF OREGON)
County of _____)
This instrument was acknowledged before me on _____ by _____ as _____
_____of_____

_____
Notary Public - State of Oregon

Metro
600 NE Grand Ave.
Portland, OR 97232-2736
503-797-1700

MERC CONTRACT NO. 304013

METRO GENERAL CONDITIONS - EXHIBIT 4

AFFIDAVIT, AGREEMENT FOR INDEMNITY, LIEN WAIVER AND RELEASE
(General Contractor – Final Closeout)

This AFFIDAVIT, AGREEMENT FOR INDEMNITY, LIEN WAIVER AND RELEASE is entered into _____, by and between Metro, a Metropolitan Service District established pursuant to Oregon law and the Metro Charter ("METRO") _____, (the "Undersigned") in accord with Metro Contract No. ____, dated _____, between Metro and the Undersigned for construction of the _____(the "Contract"). As a condition precedent to Metro's final payment under the Contract, in the amount of _____ (the "Final Payment"), and in consideration thereof, the Undersigned agrees to make the following representations, warranties, covenants, agreements and indemnities, and to fully and completely waive, release and discharge Metro from all liabilities, obligations, and claims arising under the Contract, as follows:

1. The Undersigned hereby certifies, represents and warrants as follows:

1.1 It has supplied labor, services, equipment, materials or materials transported to the construction of the _____ as General Contractor under Metro Contract No._____ (the "Project"), and has subcontracted with other persons and entities to so provide.

1.2 It has complied with all federal, state and local laws, including social security laws, unemployment compensation laws, workers' compensation laws, and tax laws, insofar as applicable to the performance of the Contract work, and has paid all federal, state and local taxes including excise, use, sales and withholding taxes.

1.3 All subcontractors, laborers, service providers, equipment suppliers and material suppliers and transporters for work, services, equipment or materials supplied to the Project or to the Undersigned and used in the Project have been paid in full by the Undersigned through the period covered by previous progress payments made by Metro.

1.4 It either has paid in full, or within ten (10) business days of receipt of the Final Payment, will pay in full all subcontractors, laborers, service providers, equipment suppliers and material suppliers and transporters for work, services, equipment or materials supplied to the Project or to the Undersigned connected with or used in the Project.

1.5 It has delivered to Metro written releases of all rights to file claims on any bonds in connection with the Contract, signed by each subcontractor, service provider and supplier who performed work, services or furnished or transported materials or equipment in connection with the Contract, in accord with Article 9 of the General Conditions to the Contract.

2. The Undersigned covenants and agrees that progress payments made by Metro up to the date hereof, in the sum of **$_____**, plus the Final Payment in the amount of **_____,** constitute full and final payment of all amounts due to Undersigned for all labor, services, equipment, and materials provided or transported in connection with the Project. The Undersigned agrees that, ***conditioned upon receipt of the Final Payment,*** and in consideration thereof, the Undersigned hereby fully and unconditionally waives, discharges and releases Metro from all liabilities, obligations and claims, including all liens, claims of lien, rights to lien, bond claim rights and any other claim for payment it now has or asserts or may have or assert for labor, services, equipment, materials provided or transported in connection with the Contract, and further releases Metro, the Project land and improvements from any claim, cause of action, or demand whatsoever arising out of or relating to the Project.

3. The Undersigned hereby agrees to defend, indemnify and hold Metro harmless from any liability or expense resulting from any claim on any bond or any other claim related to the Contract or work there under, in accord with Articles 9 and 1 of the General Conditions to the Contract.

4. The affiant signing below does hereby swear and attest that he/she has the full authority to sign this document on behalf of the Undersigned and that, ***except for the Final Payment,*** which is the full and final payment due and owing to Undersigned, that Undersigned has been paid in full for all labor (including contributions and benefits), services, equipment, supplies and materials provided or transported in connection with the Project without exceptions, and that there are no other unsettled claims or demands therefore. The Undersigned affiant further acknowledges that Metro may rely on this Affidavit, Agreement for Indemnity, Lien Waiver and Release in connection with remitting the Final Payment to Undersigned.

Dated: _____ Undersigned:_____

By:_____Its:_____

STATE OF OREGON)
) ss.
County of _____)

This instrument was acknowledged before me on _____ by _____ as _____
_____of_____

_____
Notary Public - State of Oregon

Metro
600 NE Grand Ave.
Portland, OR 97232-2736
503-797-1700

MERC CONTRACT NO. 304013

METRO GENERAL CONDITIONS - EXHIBIT 5

AFFIDAVIT, LIEN WAIVER AND RELEASE – CONDITIONAL FINAL
(Subcontractor - Closeout)

1. The undersigned, _____ ("Undersigned"), has provided labor, services, equipment, materials or materials transport to the construction of the improvements at _____ known as _____, as a Subcontractor to _____("Contractor"), Metro Contract No._____ (the "Project").

2. The Undersigned acknowledges and agrees that the sum of **$**_____ constitutes full and final payment of all amounts due to Undersigned for all labor, services, equipment, and materials provided or transported in connection with the Project (the "Final Payment"). The Undersigned agrees that, ***conditioned upon receipt of the Final Payment,*** and in consideration thereof, the Undersigned hereby fully and unconditionally waives and releases all liens, claims of lien, rights to lien, bond claim rights and any other claim for payment it now has or asserts or may have or assert for labor, services, equipment, materials provided or transported in connection with the Project, and further releases Metro, the Project land and improvements, and the Contractor from any claim, cause of action, or demand whatsoever arising out of or relating to the Project.

3. The Undersigned hereby certifies as follows:

3.1 It has complied with all federal, state and local laws, including tax laws, social security laws, unemployment compensation laws and workers' compensation laws, insofar is applicable to the performance of the subcontract work.

3.2 Its laborers, equipment suppliers and material suppliers have been fully paid through the period covered by previous progress payments made by Contractor except as explicitly noted in writing and attached hereto.

3.3 It either has paid in full, or within five (5) business days of receipt of the Final Payment, will pay in full for all labor, materials and equipment used in or furnished in connection with Project.

4. The affiant signing below does hereby swear and attest that he/she has the full authority to sign this document on behalf of the Undersigned and that, ***conditioned upon receipt of the Final Payment,*** which is the full and Final Payment due and owing to Undersigned, that Undersigned has been paid in full for all labor (including contributions and benefits), services, equipment, supplies and materials provided or transported in connection with the Project without exceptions, and that there are no other unsettled claims or demands therefore. The Undersigned affiant and further acknowledges that Metro and Contractor are relying on this Affidavit, Lien Waiver and Release in connection with processing the Final Payment.

Dated: _____ Undersigned | Subcontractor: _____
By: _____
Print Name: _____
Its: _____

STATE OF OREGON)
) *ss.*
County of Multnomah)

This instrument was acknowledged before me on _____ by _____ as _____
_____ of _____.

_____
Notary Public - State of Oregon

Project: Dragon Café Canopy
Oregon Convention center
Portland, OR
Client: **Josh Lipscomb/Metro**

Date: 9/17/13
Page: 1
By: JTW
Job #: 213167

STRUCTURAL CALCULATIONS FOR INTERIOR CANOPY

- TWO HORIZ TUBES RESIST TORSION
- EXISTING COLUMN SUPPORTS TUBES

REGISTERED PROFESSIONAL ENGINEER
14725
OREGON
JAN. 23, 1990
ROBERT GRUMMEL
EXPIRES 6/30/15

Project: Dragon Café Canopy
Oregon Convention center
Portland, OR
Client: **Josh Lipscomb/Metro**

Date: 9/17/13
Page: 2
By:
Job #: 213167

CANOPY DESIGN

$W_{PL} = 20$ psf

INTERIOR (NO SNOW LOAD)

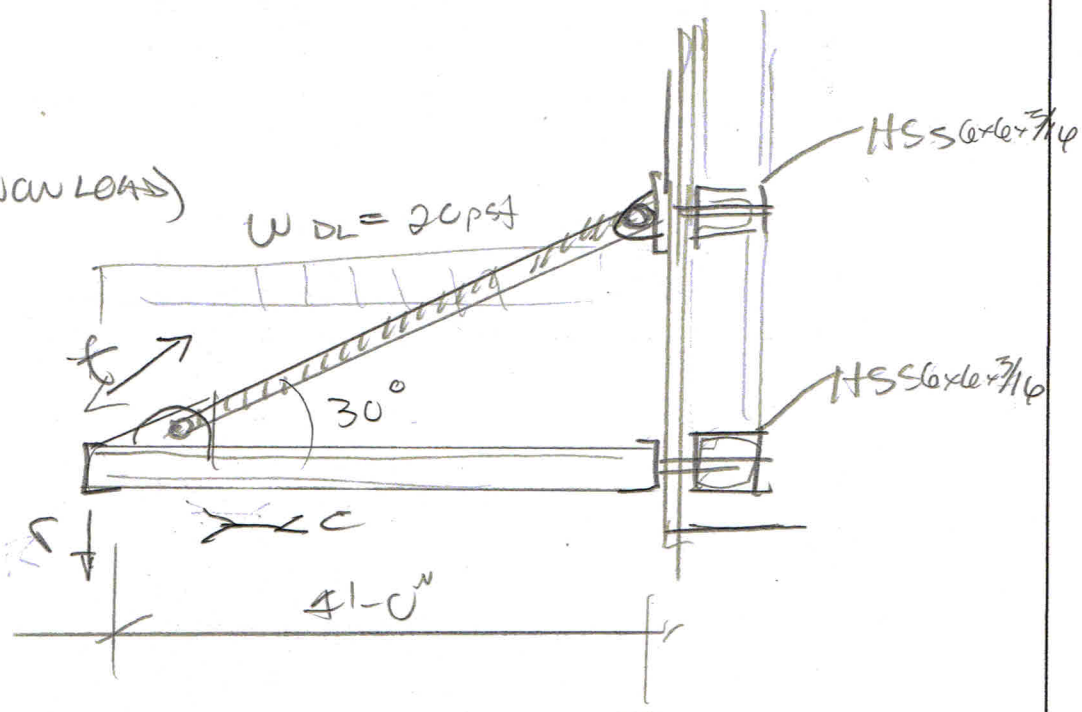

$r = 40$ PLF

$f = \frac{r}{\sin 30} = 80$ PLF

$c = \frac{r}{\tan 30} = 70$ PLF

CHECK TUBE FOR HORIZONTAL LOAD

$L = 19$ FT

$W_{HORIZ} = 70$ PLF

$M = \frac{wl^2}{8} = 3159$ lb-ft $= 37.9$ k-in

$S_{REQD} = \frac{M}{46(.67)} = 1.22$ in^3

TRY 6x6x3/16

$I = 22.3$

$\Delta = 0.31 = L/718$ OK

⇑

TRY 5x5x3/16

$S = 5.03$ in^3

$I = 12.6$

$\Delta = \frac{5(70/12)(19 \times 12)^4}{384(29 \times 10^6)(12.6)}$

$\Delta = 0.56 = L/$

Project: Dragon Café Canopy
Oregon Convention center
Portland, OR
Client: **Josh Lipscomb/Metro**

Date: 9/17/13
Page: 3
By:
Job #: 213167

TENSION MEMBER

SPACING = 5 FT

T = 400 LB

USE 3/8 ϕ ROD

FRAME MEMBERS

L = 5'-0"

W = 40 PLF

$M = \frac{wl^2}{8} = 125$ LB-FT

USE 8×2×3/16

Project: Dragon Café Canopy
Oregon Convention center
Portland, OR
Client: **Josh Lipscomb/Metro**

Date: 9/14/13
Page: 4
By:
Job #: 213167

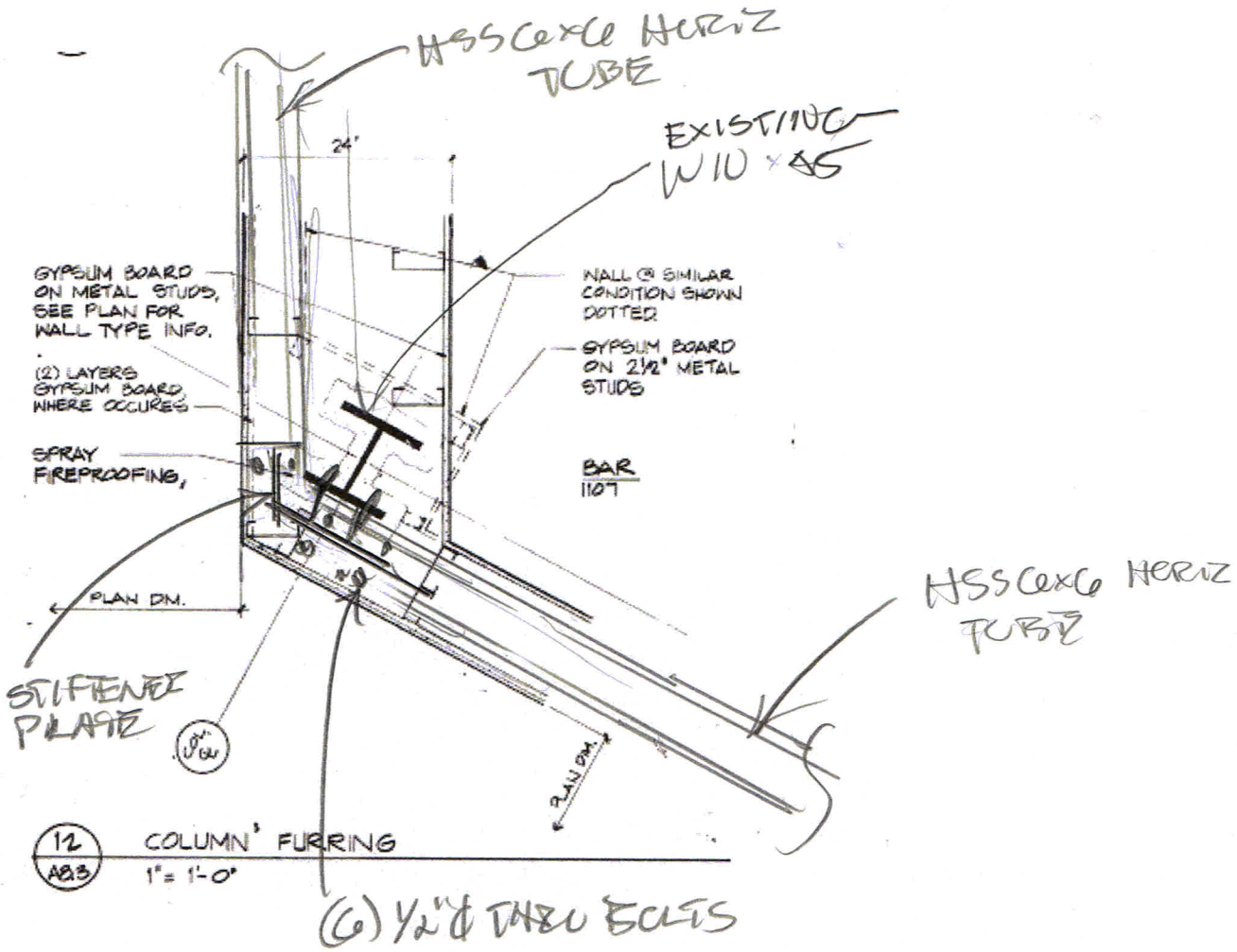

EXISTING COLUMN

TRIB ROOF ≈ 400 S.F.

$P_{EXISTING} \approx 16{,}000$ LB

$P_{NEW} = (10\ psf)(4\ ft\ AVG\ WIDTH)(12\ ft\ TRIB) = 480$ LB

MOMENT

$M = 480 \times 24'' = 11.5$ K-in

$\frac{M_n}{\Omega} = 1178$ K-in OK

$\Delta = 3\%$ OK

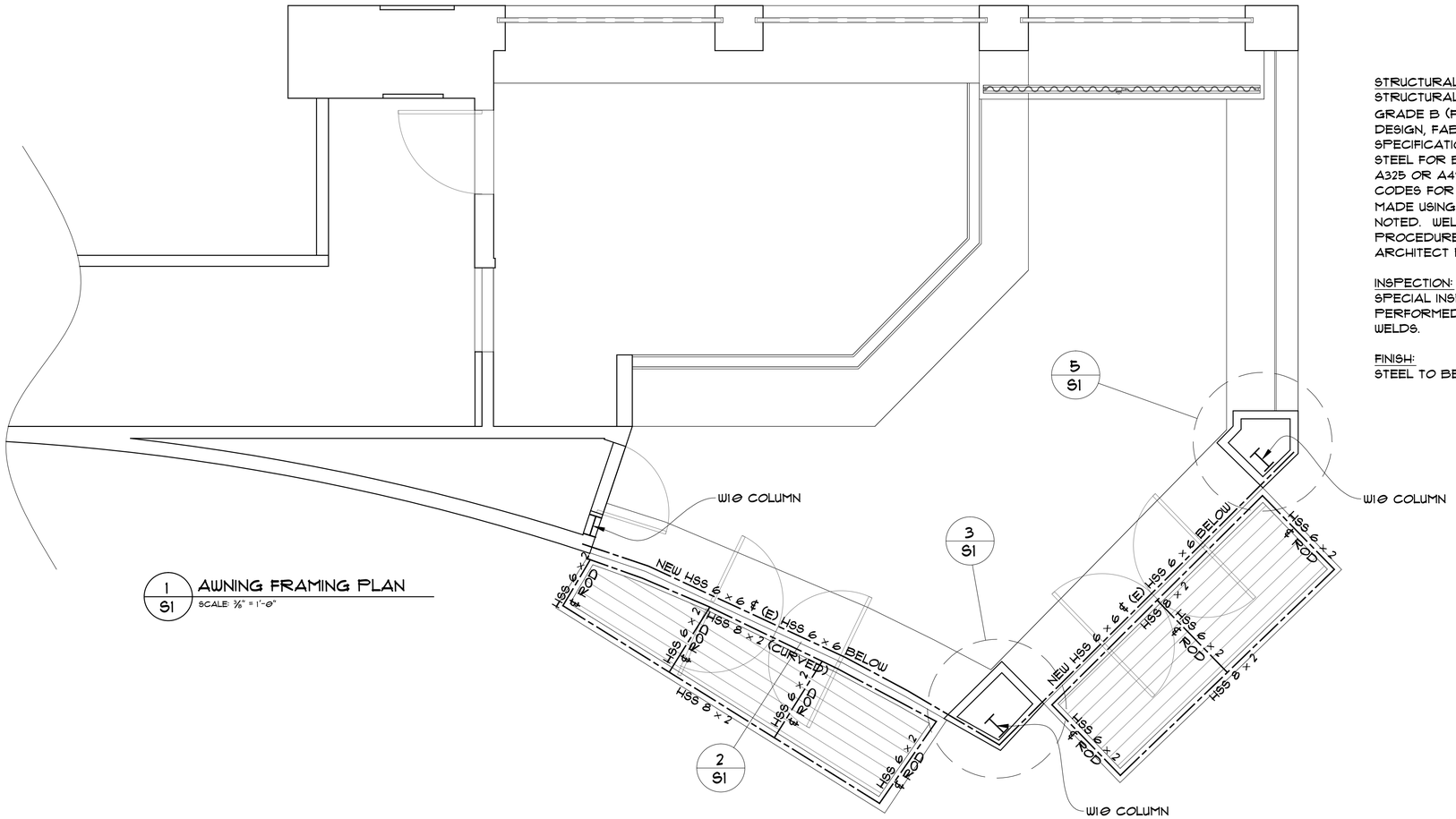

1 S1 AWNING FRAMING PLAN
SCALE: 3/8" = 1'-0"

GENERAL STRUCTURAL NOTES

STRUCTURAL STEEL:
STRUCTURAL STEEL SHALL BE ASTM A36, AS NOTED. TUBES SHALL BE ASTM A500, GRADE B (FY=46KSI). PIPES SHALL BE ASTM A501 OR ASTM A53, GRADE B. DESIGN, FABRICATION, AND ERECTION SHALL BE IN ACCORDANCE WITH THE "AISC SPECIFICATION FOR THE DESIGN, FABRICATION AND ERECTION OF STRUCTURAL STEEL FOR BUILDINGS". BOLTS SHALL CONFORM TO THE ASTM SPECIFICATION FOR A325 OR A490, HIGH STRENGTH BOLTS. WELDING SHALL CONFORM TO THE AWS CODES FOR ARC AND GAS WELDING IN BUILDING CONSTRUCTION. WELDS SHALL BE MADE USING E70XX ELECTRODES AND SHALL BE 3/16" MINIMUM UNLESS OTHERWISE NOTED. WELDING SHALL BE BY AWS CERTIFIED WELDERS. PREQUALIFIED WELDING PROCEDURES ARE TO BE USED, UNLESS AWS QUALIFICATION IS SUBMITTED TO THE ARCHITECT PRIOR TO FABRICATION.

INSPECTION:
SPECIAL INSPECTION BY AN APPROVED SPECIAL INSPECTOR SHALL BE PERFORMED FOR ALL METAL FABRICATION, AND VISUAL INSPECTION FOR ALL WELDS.

FINISH:
STEEL TO BE PRIMED AND PAINTED WITH DTM PAINT FINISH.

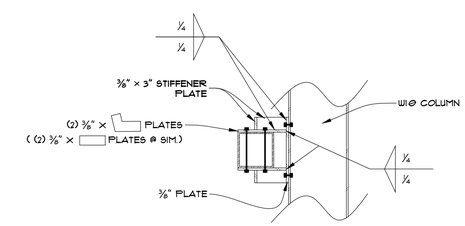

4 S1 COLUMN CONNECTION DETAIL
SCALE: 1" = 1'-0"

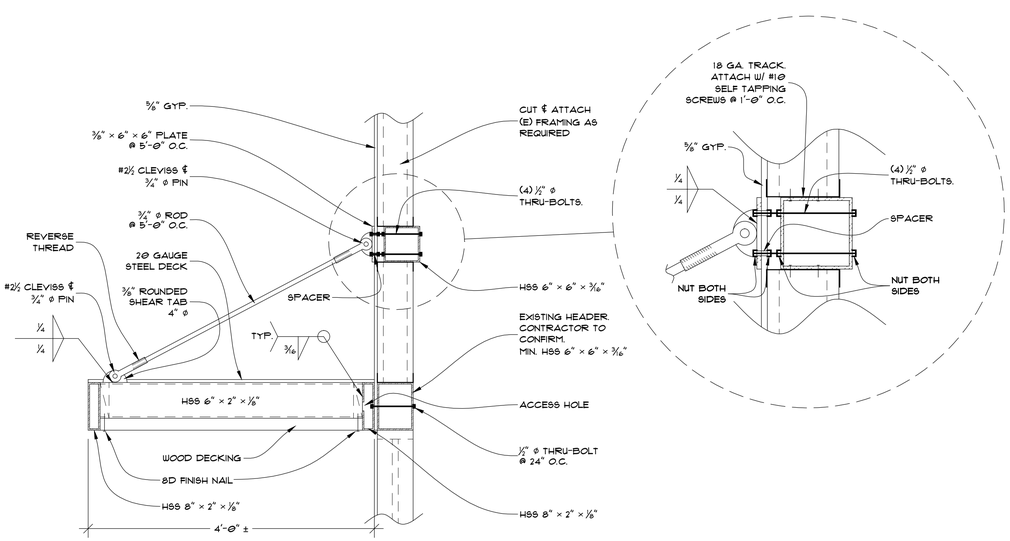

2 S1 AWNING SECTION
SCALE: 1" = 1'-0"

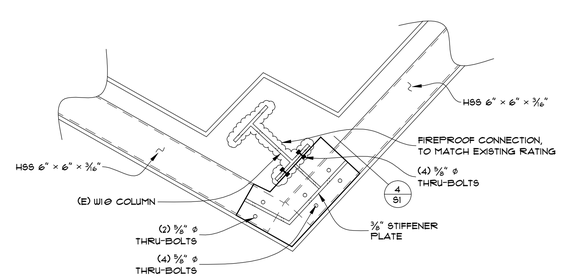

3 S1 COLUMN CONNECTION DETAIL
SCALE: 1" = 1'-0"

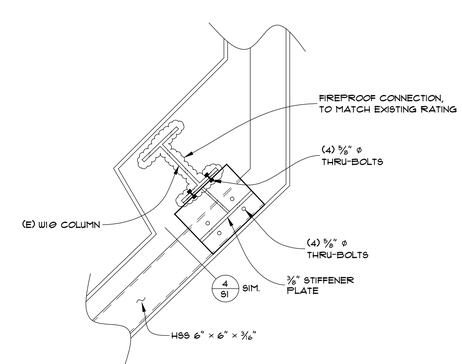

5 S1 COLUMN CONNECTION DETAIL
SCALE: 1" = 1'-0"

REGISTERED PROFESSIONAL ENGINEER 14725 OREGON JAN. 23, 1999 ROBERT GRUMMEL
EXPIRES 6/30/15

GRUMMEL ENGINEERING, LLC
7421 SE POWELL BLVD.
PORTLAND, OR 97206 - (503) 244-7014

Oregon Convention Center Dragon Cafe Remodel

1234 Street Name
Portland, OR 97200

9/17/2013

PROJECT NUMBER: 213167

ENGINEER: JJW

AWNING FRAMING PLAN & DETAILS

S1

BARGREEN | ELLINGSON
FOODSERVICE SUPPLY & DESIGN

GENERAL NOTES

1. IT SHALL BE NOTED BY THE GENERAL CONTRACTOR AND ALL SUB-CONTRACTORS THAT THIS SET OF PLANS AND THE INFORMATION CONTAINED WITHIN IN NO WAY RELIEVES SAID PARTIES OF THEIR RESPONSIBILITY TO INVESTIGATE AND COMPLY WITH ALL APPLICABLE CODES AND ORDINANCES AND TO PERFORM ALL WORK TO THE HIGHEST STANDARDS.

2. IT SHALL BE THE RESPONSIBILITY OF THE GENERAL CONTRACTOR AND ALL SUB-CONTRACTORS TO VERIFY THE ACTUAL SPACE AND MECHANICAL REQUIREMENTS OF ALL ITEMS SHOWN AS FUTURE, N/C, SUPPLIED BY "OTHERS", ETC., WITH THE OWNER PRIOR TO ROUGH-IN AND CONNECTION.

3. IT IS THE RESPONSIBILITY OF THE GENERAL CONTRACTOR TO IMMEDIATELY NOTIFY THE KITCHEN EQUIPMENT CONTRACTOR IN WRITING OF ANY CHANGES TO THE BUILDING THAT AFFECT EQUIPMENT PLACEMENT AND SIZES (I.E., WALL CHANGES, WATER HEATER LOCATIONS, ELECTRICAL PANELS, ETC.).

4. SUITABLE WALL BACKING AS SHOWN ON THESE PLANS AND AS REQUIRED BY THE OWNER SHALL BE PROVIDED AND INSTALLED BY THE GENERAL CONTRACTOR.

5. THE GENERAL CONTRACTOR SHALL PROVIDE FLOOR, WALL, CEILING AND ROOF PENETRATIONS, INCLUDING, BUT NOT LIMITED TO THOSE REQUIRED FOR: MAKE-UP AIR, CLASS II EXHAUST DUCTS, FIRE-RATED SHAFTS FOR CLASS I EXHAUST DUCTS.

6. THE GENERAL CONTRACTOR SHALL PROVIDE CONDUIT AND SLEEVES FOR REFRIGERATION LINES, SYRUP, CARBON DIOXIDE GAS, BEER LINES, LIQUOR LINES, AND DATA LINES. CONDUIT SHALL BE CIRCULAR PVC EQUAL TO THE DIAMETER INDICATED ON PLANS. ALL BENDS SHALL HAVE A MINIMUM RADIUS OF TWENTY-FOUR INCHES.

7. THE GENERAL CONTRACTOR SHALL PROPERLY SEAL ALL WALL AND FLOOR PENETRATIONS AFTER THE INSTALLATION OF RELATED EQUIPMENT AND FURNISHING ITEMS.

8. ALL DIMENSIONS SHOWN ARE FROM FACE OF FINISHED WALL OR FLOOR.

9. ALL UTILITY ROUGH-INS SHOWN ON THESE PLANS ARE SUBJECT TO CHANGE PENDING FINAL EQUIPMENT SELECTION AND LOCATION.

10. ALL UTILITY ROUGH-INS, FINAL CONNECTIONS, AND HOOK-UPS SHALL BE PROVIDED AND PERFORMED BY THE RESPECTIVE LICENSED SUB-CONTRACTORS IN COMPLIANCE WITH APPLICABLE NATIONAL AND LOCAL CODES.

11. SEISMIC BRACING INFORMATION, IF REQUIRED, IS NOT INDICATED ON THESE PLANS NOR IS IT PROVIDED BY THE KITCHEN EQUIPMENT CONTRACTOR UNLESS OTHERWISE SPECIFIED HEREIN.

12. WHERE EQUIPMENT PRODUCES NOISE THAT MAY VIBRATE THROUGH WALLS TO ANY PUBLIC AND/OR DINING AREAS, THE GENERAL CONTRACTOR SHALL PROVIDE AND INSTALL ADEQUATE SOUND PROOFING IN WALLS.

ELECTRICAL NOTES

1. ALL ELECTRICAL ROUGH-IN WORK AND FINAL CONNECTIONS TO ALL FOOD SERVICE AND RELATED EQUIPMENT AS SHOWN ON THE KITCHEN EQUIPMENT CONTRACTOR'S PLANS TO BE PERFORMED BY THE ELECTRICAL CONTRACTOR PER NATIONAL AND LOCAL CODES.

2. THE ELECTRICAL CONTRACTOR SHALL PROVIDE AND INSTALL STAINLESS STEEL OUTLET AND RECEPTACLE COVERS IN SERVICE AREAS.

3. THE ELECTRICAL CONNECTIONS, SPECIFICATIONS AND DIMENSIONS SHOWN ON THESE PLANS ARE FOR FOOD SERVICE EQUIPMENT ONLY. SEE THE ARCHITECT'S PLAN SET FOR ADDITIONAL ELECTRICAL REQUIREMENTS INCLUDING OFFICE, MENU BOARDS, TELEPHONE AND DATA LINES, ETC.

4. THE ELECTRICAL CONTRACTOR SHALL PROVIDE FUSED DISCONNECTS FOR EQUIPMENT HOOK-UPS AS REQUIRED BY CODE AND LABELING.

5. ALL ELECTRICAL ROUGH-IN WORK AND ALL FINAL CONNECTIONS FOR ALL ITEMS SHOWN AND SPECIFIED ON THESE PLANS BY BARGREEN ELLINGSON SHALL BE PERFORMED BY THE ELECTRICAL CONTRACTOR.

6. UNLESS OTHERWISE SPECIFIED IN THESE PLANS OR OTHER WRITTEN CONTRACTS, IT SHALL BE THE RESPONSIBILITY OF THE ELECTRICAL CONTRACTOR TO PROVIDE ALL ELECTRICAL-TYPE MATERIALS INCLUDING, BUT NOT LIMITED TO: WIRING, SWITCHES, DISCONNECTS, FLEX, CONDUIT, CONTACTORS, TRANSFORMERS, THERMAL OVERLOAD PROTECTORS, MAGNETIC STARTERS, SHUNT TRIP BREAKERS, ELECTRICAL PANELS, CORDS, PLUGS, COVERS, ETC.

7. ELECTRICAL CONTRACTOR SHALL PROVIDE THE KITCHEN EQUIPMENT CONTRACTOR WITH ELECTRICAL PANEL(S) SIZE AND LOCATION ALONG WITH AVAILABLE VOLTAGE AND PHASE.

8. THE ELECTRICAL CONTRACTOR SHALL FURNISH AND INSTALL ALL ELECTRICAL COMPONENTS FOR WALK-IN REFRIGERATORS AND FREEZERS INCLUDING, BUT NOT LIMITED TO: LIGHTS, DOOR VENTS, SOLENOIDS, TIME CLOCKS, DEFROST CIRCUITS AND INTERCONNECTIONS BETWEEN REMOTE COMPRESSORS AND INTERIOR MOUNTED EVAPORATOR COILS. ELECTRICAL SHALL ALSO PROVIDE DISCONNECTS AND THERMO-OVERLOAD PROTECTION FOR COMPRESSORS.

9. THE ELECTRICAL CONTRACTOR SHALL PROVIDE AND INSTALL HEAT TAPE ON DRAIN LINES IN DANGER OF FREEZING. VERIFY LENGTH WITH REFRIGERATION CONTRACTOR.

10. THE ELECTRICAL CONTRACTOR SHALL PROVIDE DISCONNECTS AT THE POWER BOX FOR EACH ICE MACHINE HEAD.

11. IT SHALL BE THE RESPONSIBILITY OF THE ELECTRICAL CONTRACTOR TO PROVIDE INTERCONNECT SWITCHING BETWEEN THE KITCHEN HOOD EXHAUST FANS AND THE KITCHEN MAKE-UP AIR SYSTEMS AS REQUIRED PER LOCAL CODE AND AUTHORITIES.

12. IT SHALL BE THE RESPONSIBILITY OF THE ELECTRICAL CONTRACTOR TO PROVIDE ELECTRICAL CONTACTORS ON ALL ELECTRICAL OUTLETS, JUNCTION BOXES, ETC. LOCATED UNDER ANY CLASS I EXHAUST HOOD SO AS TO DISCONNECT UPON ACTIVATION OF THE FIRE SUPPRESSION SYSTEM.

13. ELECTRICAL CONTRACTOR SHALL VERIFY REQUIREMENTS OF CASH REGISTERS, PRINTERS, COMPUTERS, SOUND SYSTEM, ETC. INCLUDING CONDUIT RUNS AND DEDICATED / ISOLATED OUTLET REQUIREMENTS.

14. ALL DIMENSIONS SHOWN ARE FROM GRID LINES, FINISHED WALLS OR FINISHED FLOORS TO CENTER LINE OF ELECTRICAL OUTLET BOXES. HEIGHTS ARE NOT TO BE TAKEN FROM CURBS OR PLATFORMS.

PLUMBING NOTES

1. ALL PLUMBING ROUGH-IN WORK AND FINAL CONNECTIONS TO ALL FOOD SERVICE AND RELATED EQUIPMENT AS SHOWN ON THE KITCHEN EQUIPMENT CONTRACTOR'S PLANS TO BE PERFORMED BY THE PLUMBING CONTRACTOR PER NATIONAL AND LOCAL CODES.

2. UNLESS OTHERWISE SPECIFIED IN THESE PLANS OR OTHER WRITTEN CONTRACTS, IT SHALL BE THE RESPONSIBILITY OF THE PLUMBING CONTRACTOR TO PROVIDE ALL PLUMBING-TYPE MATERIALS INCLUDING VALVES, TRAPS, LINE STRAINERS, FLOOR SINK COVERS, PRESSURE REGULATORS, SIPHON BREAKERS, ETC.

3. PLUMBING CONTRACTOR SHALL SIZE, FURNISH AND INSTALL ALL GREASE TRAPS OR INTERCEPTORS AS REQUIRED AND COORDINATE SIZES AND LOCATIONS WITH KITCHEN EQUIPMENT CONTRACTOR.

4. PLUMBING CONTRACTOR SHALL FURNISH AND INSTALL ALL GAS SHUT-OFF VALVES FOR EACH PIECE OF EQUIPMENT WITH PERMANENT I.D. TAGS AS WELL AS THE MAIN GAS VALVE(S).

5. PLUMBING CONTRACTOR SHALL FURNISH AND INSTALL ALL DIRECT SINK WASTE LINES AND ALL INDIRECT EQUIPMENT WASTE LINES AS SHOWN ON PLANS PER LOCAL CODES, INCLUDING TRAPS, TAIL PIECES, LINE STRAINERS, AND WALK-IN CONDENSATE WASTE LINES, AS REQUIRED. INDIRECT WASTE LINE ROUTING THROUGH CABINETS SHALL BE IN A MANNER SO AS TO MAXIMIZE USABLE STORAGE SPACE.

6. ALL DRAIN LINES FROM EQUIPMENT REQUIRING CONDENSATION REMOVAL SHALL BE RUN IN COPPER.

7. THE PLUMBING CONTRACTOR SHALL PROVIDE AND INSTALL INSULATION MATERIAL ON ALL DRAINLINES FROM ICE BINS, ICE PANS, ETC., SO AS TO ELIMINATE CONDENSATION FORMATION.

8. ALL INDIRECT WASTE LINES TO HAVE A 1" MINIMUM AIR GAP.

9. FLOOR SINKS SHALL BE FURNISHED AND INSTALLED BY THE PLUMBING CONTRACTOR IN LOCATIONS SHOWN, AND SUPPLIED WITH 3/4 GRATE OR AS SPECIFIED. AREA DRAINS, IF REQUIRED, SHALL BE VERIFIED WITH THE ARCHITECT.

10. IT SHALL BE THE RESPONSIBILITY OF THE GENERAL CONTRACTOR TO VERIFY THAT THE LOCATIONS FOR ALL MECHANICAL REQUIREMENTS WHICH REQUIRE FLOOR PENETRATIONS DO NOT CONFLICT WITH STRUCTURAL MEMBERS IN THE FLOOR.

11. THE GENERAL CONTRACTOR SHALL SUPERVISE THE LOCATION OF ALL FLOOR DRAINS ON THE JOB SITE SO AS TO ENSURE THE BEST SLOPE POSSIBLE OF THE SURROUNDING FLOOR TO THESE DRAINS.

12. PLUMBER SHALL FURNISH AND INSTALL PRESSURE REDUCING VALVE(S) AT DISHWASHER(S), GLASS WASHER(S), STEAMER(S) AND OTHER EQUIPMENT, AS REQUIRED.

13. IT SHALL BE THE RESPONSIBILITY OF THE PLUMBING CONTRACTOR TO FURNISH AND INSTALL ALL WATER HEATERS FOR THIS PROJECT AND TO ENSURE ADEQUATE WATER SUPPLY FOR THE FOOD SERVICE EQUIPMENT. WATER TEMPERATURE TO THE DISHWASHER SHALL BE 140°. COORDINATE LOCATION OF WATER HEATER WITH KITCHEN EQUIPMENT CONTRACTOR.

14. THE PLUMBING CONNECTIONS, SPECIFICATIONS AND DIMENSIONS SHOWN ON THESE PLANS ARE FOR FOOD SERVICE EQUIPMENT ONLY. SEE ARCHITECT'S PLAN SET FOR ALL OTHER PLUMBING REQUIREMENTS FOR THIS PROJECT.

MECHANICAL NOTES

1. THE MECHANICAL CONTRACTOR SHALL FURNISH AND INSTALL EXHAUST AND SUPPLY DUCTS FOR KITCHEN HOODS IN ACCORDANCE WITH APPLICABLE NATIONAL AND LOCAL CODES AND SHALL COORDINATE AIR VOLUME REQUIREMENTS, DUCT SIZES, AND LOCATIONS WITH KITCHEN EQUIPMENT CONTRACTOR.

2. THE MECHANICAL CONTRACTOR SHALL ENSURE THAT 100% OF THE AIR PULLED FROM THE KITCHEN IS REPLACED. WHERE A PORTION OF SUPPLY AIR IS PROVIDED THROUGH THE HOODS, THE MECHANICAL CONTRACTOR SHALL PROVIDE THE REMAINDER AS REQUIRED AND BALANCE THE COMPLETE SYSTEM.

3. WHERE DUCTWORK IS SUPPLIED BY THE MECHANICAL CONTRACTOR, THE MECHANICAL CONTRACTOR SHALL MAKE FINAL CONNECTIONS BETWEEN DUCTWORK AND HOOD DUCT COLLARS.

4. THE MECHANICAL CONTRACTOR SHALL PERFORM FINAL AIR BALANCING TO THE BUILDING.

5. THE MECHANICAL CONTRACTOR IS RESPONSIBLE FOR OBTAINING ALL HOOD HANGING PERMITS AS PART OF THE MECHANICAL PERMIT. THESE DOCUMENTS ARE TO INCLUDE ALL SEISMIC AND ENGINEERING CALCULATIONS APPLICABLE TO NATIONAL AND LOCAL CODES.

WALL BACKING NOTES

1. GENERAL CONTRACTOR SHALL CONSULT WITH OWNER AND BARGREEN ELLINGSON AT THE TIME OF LAYOUT FOR WALL BACKING FOR CONFIRMATION OF ALL DIMENSIONS AND UP-DATE REQUIREMENTS.

2. WALL BACKING TO BE USED FOR WALL MOUNTED EQUIPMENT AND SHELVES.

3. WALL BACKING TO BE 5/8" PLYWOOD, WALL BACKING NOTED AS SM. TO BE 16 - GAUGE SHEET METAL.

4. WALL BACKING TO BE BUILT INTO WALL SO THAT FINISHED WALL IS A FLUSH SURFACE.

PROJECT INFORMATION

FOOD SERVICE DRAWINGS:

CS	COVER SHEET
K-1	FOOD SERVICE EQUIPMENT PLAN & SCHEDULE
K-2	DEMO & NEW WALL PLAN
K-3	ELECTRICAL ROUGH-IN PLAN
K-4	PLUMBING ROUGH-IN PLAN
ID-1	FINISH PLAN
ID-2	FINISH SCHEDULE
ID-3	REFLECTED CEILING PLAN & LIGHTING SCHEDULE
ID-4	INTERIOR ELEVATIONS
ID-4.1	INTERIOR ELEVATIONS
ID-5	INTERIOR SECTIONS/ DETAILS
ID-5.1	INTERIOR SECTIONS/ DETAILS

ABBREVIATIONS

ACT	ACOUSTICAL CEILING TILE
AFF	ABOVE FINISHED FLOOR
APPROX	APPROXIMATELY
ARCH	ARCHITECT, ARCHITECTUAL
CG	CORNER GUARD
CLG	CEILING
CW	COLD WATER
DCO	DUPLEX OUTLET
DI	DEDICATED / ISOLATED
DIA	DIAMETER
DIM	DIMENSION/ DIMMING
DW	DISH WASHER
DWG	DRAWING
EA	EACH
E.C.	ELECTRICAL CONTRACTOR
ELEC	ELECTRICAL
EXIST	EXISTING
FLR	FLOOR
FS	FLOOR SINK
GC	GENERAL CONTRACTOR
GYP	GYPSUM
HT	HEIGHT
HVAC	HEATING, VENTING, AND AIR CONDITIONING
HW	HOT WATER
JBOX	JUNCTION BOX
MAX	MAXIMUM
MECH	MECHANICAL
MIN	MINIMUM
N/C	NOT IN CONTRACT
NTS	NOT TO SCALE
SCO	SINGLE CONNECTION OUTLET
S/S	STAINLESS STEEL
TYP	TYPICAL
UC	UNDER COUNTER
VFY	VERIFY
W/	WITH
W/O	WITHOUT

PROJECT DIRECTORY

PROPERTY MANAGER:
METRO - EXPOSITION RECREATION COMMISSION
6000 NE GRAND AVENUE
PORTLAND, OR 97232-2736
PH: (503) 797-1700
CONTACT: JOSH LIPSCOMB

FOOD SERVICE DESIGNER:
BARGREEN ELLINGSON
3232 NW INDUSTRIAL STREET
PORTLAND, OR 97210
PH: (503) 227-1161
FAX: (503) 727-3104
CONTACT: NAME

PROJECT INFORMATION

ADDRESS:
777 NE MLK BLVD.
PORTLAND, OR 97232

DESCRIPTION:
OREGON CONVENTION CENTER
DRAGON CAFE REMODEL

VICINITY MAP

08/09/2013 PROGRESS PRINT

BARGREEN | ELLINGSON
FOODSERVICE SUPPLY & DESIGN
3232 NW INDUSTRIAL STREET
PORTLAND, OR 97210
Phone: (503) 227-1161
Fax: (503) 345-0738
Website
www.bargreen.com

OREGON CONVENTION CENTER
DRAGON CAFE REMODEL
777 NE MLK BLVD.
PORTLAND, OR 97232

RELEASE INFORMATION

#	DATE
0	02/07/2013
1	----
2	----
3	----
4	----
5	----
6	----
7	----
8	----

This plan is the property of Bargreen Ellingson and is loaned subject to the condition that it is not to be copied, reproduced, or distributed either in whole or in part, without written permission, and is not to be used in any way detrimental to the best interests of the company.
© 2009 BARGREEN ELLINGSON INC.

DRAWN BY:
TJ/SM
PROJECT MANAGER:
Jeremy Edmondson
SHEET TITLE:
COVER SHEET
SHEET NUMBER
CS
1 OF 12
PROJECT NUMBER
H-061

ITEM NO.	SUPPLIER K.E.C.	SUPPLIER OWNER	SUPPLIER OTHERS	QUANTITY	DESCRIPTION	MANUFACTURER MODEL NUMBER	ELECTRICAL KW	ELECTRICAL AMPS	ELECTRICAL HP	ELECTRICAL VOLTS	ELECTRICAL PHASE	ELECTRICAL CONN.	PLUMBING HOT	PLUMBING COLD	PLUMBING WASTE	GAS CONN.	GAS BTU	NOTES
1			X	LOT	COUNTERTOP	CUSTOM MILLWORK												REPLACEMENT OF EXISTING & RETROFIT
2			X	LOT	UNDER COUNTER CABINETS-OPERATOR SIDE	CUSTOM MILLWORK												REFACING OVER EXISTING SURFACE
3			X	LOT	COUNTER DIE WALL FRONT SURFACE	CUSTOM MILLWORK												
4		X		4	POS SYSTEM & PRINTERS	BY OWNER		15.0		120	1	5-15P						DEDICATED & ISOLATED CIRCUIT. VERIFY WITH OWNER
5				-	SPARE NUMBER													
6			X	4	POS SHROUD	CUSTOM MILLWORK												
7	X			4	BEER TOWER	PERLICK-4041-2B												ROUTE TO EXISTING FLOOR SINK. TO REPLACE BEER LINES AT MINIMUM.
8	X			4	BEER DRIP TRAY	CUSTOM STAINLESS STEEL									FS			TO REPLACE BEER TRAY AT MINIMUM. VERIFY WITH OWNER
9		X		1	REFRIGERATOR, UNDERCOUNTER	BY OWNER/ EXISTING		3.5	1/4	115	1	5-15P						
10		X		1	WASTE RECEPTACLE	RUBBERMAID 3540												
11		X		2	CARBONATOR	BY OWNER-EXISTING RELOCATE		7.2	1/3	120	1	PLUG		1/2"				1" COLD WATER TO DISPENSER. COORDINATE MOVING EQUIPMENT W/ BEVERAGE COMPANY (CONTACT PROVIDED BY OWNER)
12		X		2	SODA MACHINE	BY OWNER-EXISTING RELOCATE		5.0		120	1	PLUG			FS			COLD WATER SUPPLIED FROM CARBONATOR. COORDINATE MOVING EQUIPMENT W/ BEVERAGE COMPANY (CONTACT PROVIDED BY OWNER)
13		X		2	WATER FILTER	BY OWNER-EXISTING RELOCATE								3/8"				COORDINATE MOVING EQUIPMENT W/ BEVERAGE COMPANY (CONTACT PROVIDED BY OWNER)
14				-	SPARE NUMBER													
15				-	SPARE NUMBER													
16	X			1	GRAB N GO CASE	STRUCTURAL CONCEPT CO4T48R		16.0		120	1	5-20P						FINISH: FORMICA #837-58 GRAPHITE
17	X			1	HEATED SHELF	HATCO GRS-48-H		5.0		120	1	5-15P						
18	X			1	SNEEZE GUARD	ENGLISH M-1000												50" W GLASS SPAN
19	X			3	HEAT LAMP	HATCO DL-160-RL	0.25	2.0		120	1	JBOX						
20		X		1	WATER FILTER	BY OWNER/ EXISTING								3/8"				
21		X		1	ICE MAKER W/ BIN	BY OWNER/ EXISTING				115	1	JBOX			FS			EXISTING FLOOR SINK
22			X		FOOD PASS SHELF	CUSTOM STAINLESS												COORDINATE W/ ROUND-UP DOOR ASSEMBLY
23	X			2	HEAT LAMP	HATCO GRAH-36	0.80	6.70		120	1	JBOX						
24	X			1	CORNER GUARD	CUSTOM STAINLESS STEEL												FULL HIGH LENGTH
25				-	SPARE NUMBER													
26			X	LOT	ISLAND COUNTER TOP	CUSTOM MILLWORK												REPLACEMENT OF EXISTING W/ PROVISIONS FOR DROP-IN EQUIPMENT
27			X	LOT	ISLAND CABINET	CUSTOM MILLWORK												REFACING OVER EXISTING SURFACE
28		X		1	HAND SINK	BY OWNER REMOVE & REPLACE									1-1/2"			EXISTING TO REMAIN
29		X		1	FAUCET	BY OWNER REMOVE & REPLACE							1/2"	1/2"				EXISTING TO REMAIN
30		X		1	FOOD WARMER	BY OWNER REMOVE & REPLACE												EXISTING TO REMAIN
31		X		1	FOOD WELL, DROP-IN	BY OWNER REMOVE & REPLACE	1.20	10.8		120	1	JBOX			FS			EXISTING TO REMAIN
32		X		1	HOT DOG GRILLE	BY OWNER REMOVE & REPLACE												EXISTING TO REMAIN
33		X		1	FOOD WELL, DROP-IN	BY OWNER	1.20	10.8		120	1	JBOX		*	FS			VERIFY REQUIREMENT
34		X		2	FOOD PAN, DROP-IN	BY OWNER												EXISTING TO REMAIN
35		X		2	DIGITAL MENU W/ NET WORK	BY OWNER				120	1	JBOX						SUSPENDED ABOVE ISLAND COUNTER
36				-	SPARE NUMBER													
37				-	SPARE NUMBER													
38				-	SPARE NUMBER													
39			X	1	CHALK SIGN 'BEVERAGES'	BY MILLWORK OR G.C												MOUNTED ON SOFFIT W/ 'Z' CLIPS
40		X		2	DIGITAL MENU	BY OWNER				120	1	JBOX						MOUNTED ON SOFFIT
41			X	1	CHALK SIGN 'PIZZA'	BY MILLWORK OR G.C												MOUNTED ON SOFFIT W/ 'Z' CLIPS
42			X	1	COIL DRAPERY	CASCADE COIL DRAPERY												REFER TO FINISH SCHEDULE ID-2
43			X	1	STAND UP COUNTER	CUSTOM MILLWORK												EXISTING TOP TO BE REPLACED / POSTS TO BE REPAINTED
44			X	1	CONDIMENT STAND	CUSTOM MILLWORK												
45	X			1	CONDIMENT DISPENSER	TBD												
46	X			1	CONDIMENT PUMP	TBD												
47			X	LOT	DIGITAL WALLCOVERING	CUSTOM MILLWORK												REFER TO FINISH SCHEDULE (ID-2)
48			X	LOT	WOOD GRILLE CEILING SYSTEM	9 WOOD-CUSTOM												REFER TO FINISH SCHEDULE & RCP (ID-2, ID-3)
49				-	SPARE NUMBER													
50				-	SPARE NUMBER													
51			X	LOT	STOREFRONT CANOPY W/ SIGNAGE & LIGHTING	CUSTOM MILLWORK				120	1	JBOX						REFER TO FINISH SCHEDULE & RCP (ID-2, ID-3)
52			X	LOT	STOREFRONT COLUMN WAINSCOT	CUSTOM MILLWORK												REFER TO FINISH PLAN & SCHEDULE (ID-1, ID-2)
53			X	LOT	EXTERIOR WAINSCOT	CUSTOM MILLWORK												REFER TO FINISH PLAN & SCHEDULE (ID-1, ID-2)
54			X	4	TABLE													
55			X	16	CHAIR													
56		X		1	DIGITAL MENU W/ NETWORK	BY OWNER				120	1	JBOX						MOUNTED ABOVE CONCESSION WINDOW COUNTER
57		X		1	DIGITAL MENU W/ NETWORK	BY OWNER				120	1	JBOX						MOUNTED ABOVE CONCESSION WINDOW COUNTER
58			X	1	CHALK SIGN	BY MILLWORK OR G.C												MOUNTED AT CONCESSION ENTRANCE W/ 'Z' CLIPS
59		X		1	ROLL DOWN FIRE DOOR ASSEMBLY	BY OWNER				120	1	JBOX						MOUNTED AT FOOD PASS WINDOW

GENERAL NOTES

1. IT SHALL BE NOTED BY THE GENERAL CONTRACTOR AND ALL SUB-CONTRACTORS THAT THIS SET OF PLANS AND THE INFORMATION CONTAINED WITHIN IN NO WAY RELIEVES SAID PARTIES OF THEIR RESPONSIBILITY TO INVESTIGATE AND COMPLY WITH ALL APPLICABLE CODES AND ORDINANCES AND TO PERFORM ALL WORK TO THE HIGHEST STANDARDS.

2. IT SHALL BE THE RESPONSIBILITY OF THE GENERAL CONTRACTOR AND ALL SUB-CONTRACTORS TO VERIFY THE ACTUAL SPACE AND MECHANICAL REQUIREMENTS OF ALL ITEMS SHOWN AS FUTURE, NIC, SUPPLIED BY "OTHERS", ETC., WITH THE OWNER PRIOR TO ROUGH-IN AND CONNECTION.

3. IT IS THE RESPONSIBILITY OF THE GENERAL CONTRACTOR TO IMMEDIATELY NOTIFY THE KITCHEN EQUIPMENT CONTRACTOR IN WRITING OF ANY CHANGES TO THE BUILDING THAT AFFECT EQUIPMENT PLACEMENT AND SIZES (I.E., WALL CHANGES, WATER HEATER LOCATIONS, ELECTRICAL PANELS, ETC.).

4. SUITABLE WALL BACKING AS SHOWN ON THESE PLANS AND AS REQUIRED BY THE OWNER SHALL BE PROVIDED AND INSTALLED BY THE GENERAL CONTRACTOR.

5. THE GENERAL CONTRACTOR SHALL PROVIDE FLOOR, WALL, CEILING AND ROOF PENETRATIONS, INCLUDING, BUT NOT LIMITED TO THOSE REQUIRED FOR: MAKE-UP AIR, CLASS II EXHAUST DUCTS, FIRE-RATED SHAFTS FOR CLASS I EXHAUST DUCTS.

6. THE GENERAL CONTRACTOR SHALL PROVIDE CONDUIT AND SLEEVES FOR REFRIGERATION LINES, SYRUP, CARBON DIOXIDE GAS, BEER LINES, LIQUOR LINES, AND DATA LINES. CONDUIT SHALL BE CIRCULAR PVC EQUAL TO THE DIAMETER INDICATED ON PLANS. ALL BENDS SHALL HAVE A MINIMUM RADIUS OF TWENTY-FOUR INCHES.

7. THE GENERAL CONTRACTOR SHALL PROPERLY SEAL ALL WALL AND FLOOR PENETRATIONS AFTER THE INSTALLATION OF RELATED EQUIPMENT AND FURNISHING ITEMS.

8. ALL DIMENSIONS SHOWN ARE FROM FACE OF FINISHED WALL OR FLOOR.

9. ALL UTILITY ROUGH-INS SHOWN ON THESE PLANS ARE SUBJECT TO CHANGE PENDING FINAL EQUIPMENT SELECTION AND LOCATION.

10. ALL UTILITY ROUGH-INS, FINAL CONNECTIONS, AND HOOK-UPS SHALL BE PROVIDED AND PERFORMED BY THE RESPECTIVE LICENSED SUB-CONTRACTORS IN COMPLIANCE WITH APPLICABLE NATIONAL AND LOCAL CODES.

11. SEISMIC BRACING INFORMATION, IF REQUIRED, IS NOT INDICATED ON THESE PLANS NOR IS IT PROVIDED BY THE KITCHEN EQUIPMENT CONTRACTOR UNLESS OTHERWISE SPECIFIED HEREIN.

12. WHERE EQUIPMENT PRODUCES NOISE THAT MAY VIBRATE THROUGH WALLS TO ANY PUBLIC AND/OR DINING AREAS, THE GENERAL CONTRACTOR SHALL PROVIDE AND INSTALL ADEQUATE SOUND PROOFING IN WALLS.

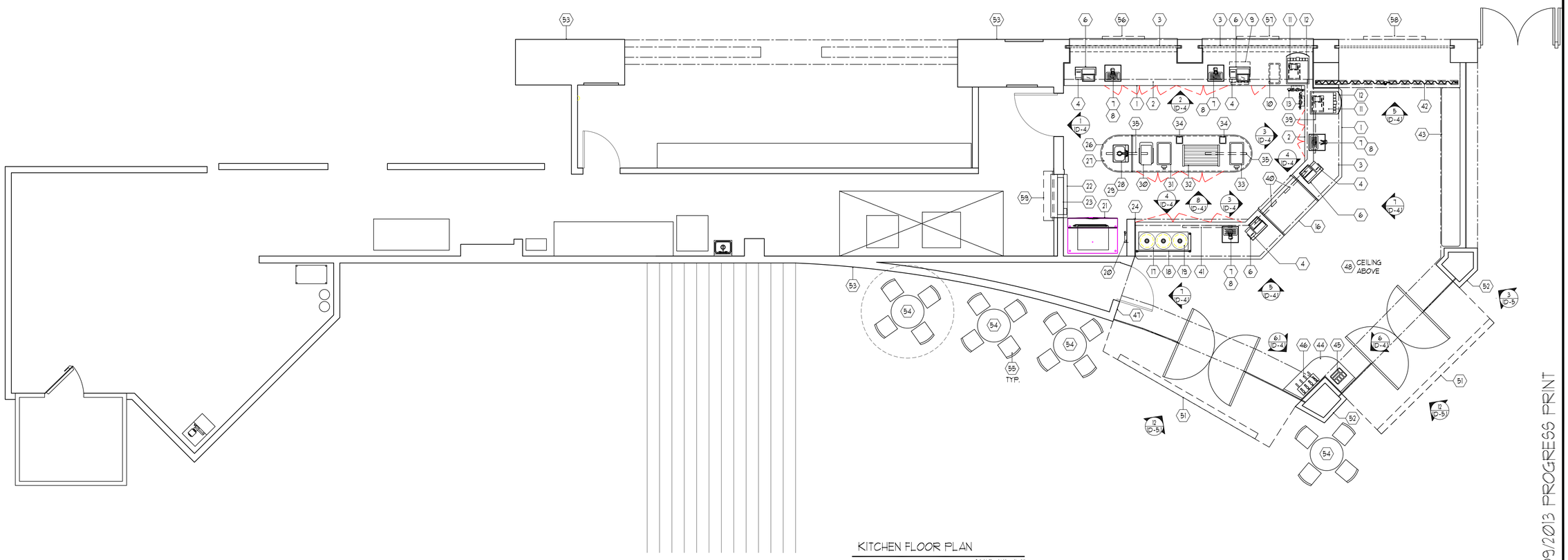

KITCHEN FLOOR PLAN

SCALE: 1/4" = 1'-0"

08/09/2013 PROGRESS PRINT

BARGREEN ELLINGSON
FOODSERVICE SUPPLY & DESIGN
3232 NW INDUSTRIAL STREET
PORTLAND, OR 97210
Phone: (503) 227-1161
Fax: (503) 345-0738
Website
www.bargreen.com

OREGON CONVENTION CENTER
DRAGON CAFE REMODEL
777 NE MLK BLVD.
PORTLAND, OR 97232

RELEASE INFORMATION

#	DATE
0	02/07/2013
1	----
2	----
3	----
4	----
5	----
6	----
7	----
8	----

This plan is the property of Bargreen Ellingson and is loaned subject to the condition that it is not to be copied, reproduced, or distributed either in whole or in part, without written permission, and is not to be used in any way detrimental to the best interests of the company.

© 2009 BARGREEN ELLINGSON INC.

DRAWN BY: TJ/SM

PROJECT MANAGER: Jeremy Edmondson

SHEET TITLE: FOOD SERVICE EQUIPMENT PLAN

SHEET NUMBER: K-1

2 OF 12

PROJECT NUMBER: H-061

MERC CONTRACT NO 304013

KEY NOTES

1. G.C. TO REMOVE EXISTING WALL TILES. PATCH/ REPAIR / PREPARE FOR NEW PAINT.
2. G.C. TO DEMO EXISTING DIE WALL SURFACE. PATCH/ REPAIR/ PREPARE FOR TILE INSTALLATION.
3. G.C. TO REMOVE EXISTING COUNTERTOP. SALVAGING THE BASE CABINETS.
4. G.C. TO REMOVE EXISTING EQUIPMENT TO BE PLACED IN STORAGE (PROVIDED BY OWNER).
5. G.C. TO REMOVE EXISTING GLAZING SCREEN AND PATCH/REPAIR WALLS & SOFFIT
6. MILLWORK CONTRACTOR TO REFACE EXISTING LOWER CABINETS WITH NEW MATERIAL AS NOTED ON FINISH SCHEDULE.
7. G.C. TO DEMO EXISTING CABINET AS INDICATED FOR NEW FURRED OUT WALL. (REFER TO NEW WALL PLAN FOR DETAILS).
8. G.C. TO DISCONNECT EQUIPMENT AND RE-USE EXISTING UTILITY CONNECTIONS AND/OR RE-ROUTE ACCORDING TO ROUGH-IN PLANS. KEC TO REMOVE EQUIPMENT AND PLACE IN STORAGE (PROVIDED BY OWNER). OWNER TO THOROUGHLY CLEAN EQUIPMENT, AS NECESSARY, PRIOR TO RE-INSTALLATION BY KEC.
9. KEC TO SUPPLY AND INSTALL NEW BEER TOWERS AND DRIP PANS IN EXISTING LOCATIONS (VERIFY WITH OWNER). REPLACE BEER LINES AND DRIP PANS AT MINIMUM. COORDINATE WITH BEER SYSTEM PURVEYOR TO RE-CONNECT OR ROUTE NEW BEER LINES. PLUMBER TO RE-CONNECT OR INSTALL NEW DRAIN LINES AS REQUIRED.
10. G.C. TO REMOVE STAND UP COUNTER POSTS FOR NEW FLOOR INSTALLATION. REPAINT POSTS AND PLACE IN STORAGE (PROVIDED BY OWNER). MILLWORK CONTRACTOR TO REINSTALL W/ NEW MILLWORK TOP.
11. G.C. TO DEMO EXISTING CONDIMENT CABINET. PATCH/ REPAIR/ PREPARE COLUMN FOR NEW MILLWORK INSTALLED BY MILLWORK CONTRACTOR.
12. G.C. TO DEMO EXISTING T-BAR CEILING & LIGHT FIXTURES AT RETAIL AREA. REPAIR/ PREPARE UPPER WALLS FOR NEW CEILING APPLICATION.
13. G.C. TO REMOVE EXISTING HORIZONTAL TRIM AT TOP OF ENTRY DOORS/ WINDOWS ON ALL EXTERIOR SIDES. PATCH / REPAIR / PREPARE FOR NEW PAINT.
14. G.C. TO REMOVE EXISTING DOOR FRAME. COORDINATE WITH OWNER TO PROVIDE FRAMELESS DOOR FOR SEAMLESS APPLICATION OF WALL MURAL.
15. G.C. TO REMOVE SUSPENDED MENU BOARD CABINET. PATCH / REPAIR / PREPARE CEILING FOR NEW PAINT.
16. G.C. TO DISCONNECT ALL COUNTERTOP EQUIPMENT AND RE-USE EXISTING UTILITY CONNECTIONS AND/OR RE-ROUTE ACCORDING TO ROUGH-IN PLANS. KEC TO REMOVE EQUIPMENT AND PLACE IN STORAGE (PROVIDED BY OWNER). OWNER TO THOROUGHLY CLEAN EQUIPMENT, AS NECESSARY, PRIOR TO RE-INSTALLATION BY KEC.
17. G.C. TO DEMO EXISTING WALLTO CREATE OPENING AS NOTED FOR RELOCATED DOOR. PATCH/ REPAIR/ PREPARE TO ENSURE SMOOTH CONDITION.
18. G.C. TO REMOVE & RELOCATE EXISTING FIRE DOOR. PATCH/ REPAIR WALL TO ACCOMMODATE FOR PASS SHELVES & WINDOW TRIM INSTALLED BY K.E.C.
19. G.C. TO DEMO EXISTING WALL TO 7'-0" FINISHED HEIGHT PER PLANS. PATCH / REPAIR/ PREPARE FLOOR, WALLS & CEILING FOR NEW PAINT AND FLOORING.
20. G.C. TO REMOVE EXISTING EXTERIOR LIGHTS. PATCH/ REPAIR/ PREPARE EXTERIOR WALL FOR NEW PAINT & LIGHTS (BY OTHERS.)
21. G.C. TO REFACE EXISTING WOOD SIGN BOXES AT TOP OF EACH WINDOW BAY ON HALL SIDE WITH NEW MATERIAL AS NOTED ON FINISH SCHEDULE.
22. G.C. TO REMOVE EXISTING RESILIENT FLOORING. PATCH/ REPAIR/ PREPARE FOR NEW FINISH.
23. G.C. TO REMOVE EXISTING LIGHT FIXTURE AND RELOCATE HVAC & SPRINKLERS AS NECESSARY. PATCH/ REPAIR/ PREPARE CEILING FOR NEW FINISH.
24. G.C. TO FUR OUT NEW WALL AS SHOWN ON PLAN. PREPARE WALL TO ACCOMMODATE FOR FIRE RATED ROLL DOWN DOOR INSTALLATION.
25. G.C. TO FILL IN OPENING WITH PARTIAL HEIGHT GWB WALL, FINISHED AT 48" AFF. PREPARE WALL TO ACCOMMODATE FOR PASS SHELVES & WINDOW TRIMS (PROVIDED BY KEC).
26. G.C. TO INSTALL NEW GWB WALL AS INDICATED. PATCH/ PREPARE FOR NEW PAINT. REFER TO PARTITION WALL SECTION.
27. G.C. TO INSTALL NEW FURRED WALL AS SHOWN ON PLAN. ALIGN FINISHED SURFACE WITH EXISTING COLUMN AND EDGE OF NEW SOFFIT. PATCH/ PREPARE FOR NEW PAINT.
28. G.C. TO ADD NEW SOFFIT TO ALIGN WITH EDGE OF NEW FURRED WALL AS SHOWN ON PLAN. FLUSH BOTTOM OF NEW SOFFIT WITH EXISTING AND CREATE RECESS FOR MOUNTING TRACK (BY OTHERS)-REFER TO ID-3. PATCH/ PREPARE SURFACE FOR NEW PAINT. RELOCATE EXIT SIGN.
29. G.C. TO PREPARE EXISTING FLOOR FOR NEW MATERIAL INSTALLATION. CONSULT W/ OWNER ABOUT REMOVAL OR LAY OVER EXISTING.
30. G.C. TO INSTALL NEW CANOPIES ABOVE MAIN ENTRANCES AS SHOWN ON PLAN. CONSULT WITH STRUCTURAL ENGINEER FOR SUPPORTING DETAILS AND COORDINATE WITH SIGNAGE AND LIGHTING CONTRACTORS FOR INSTALLATION REQUIREMENTS.

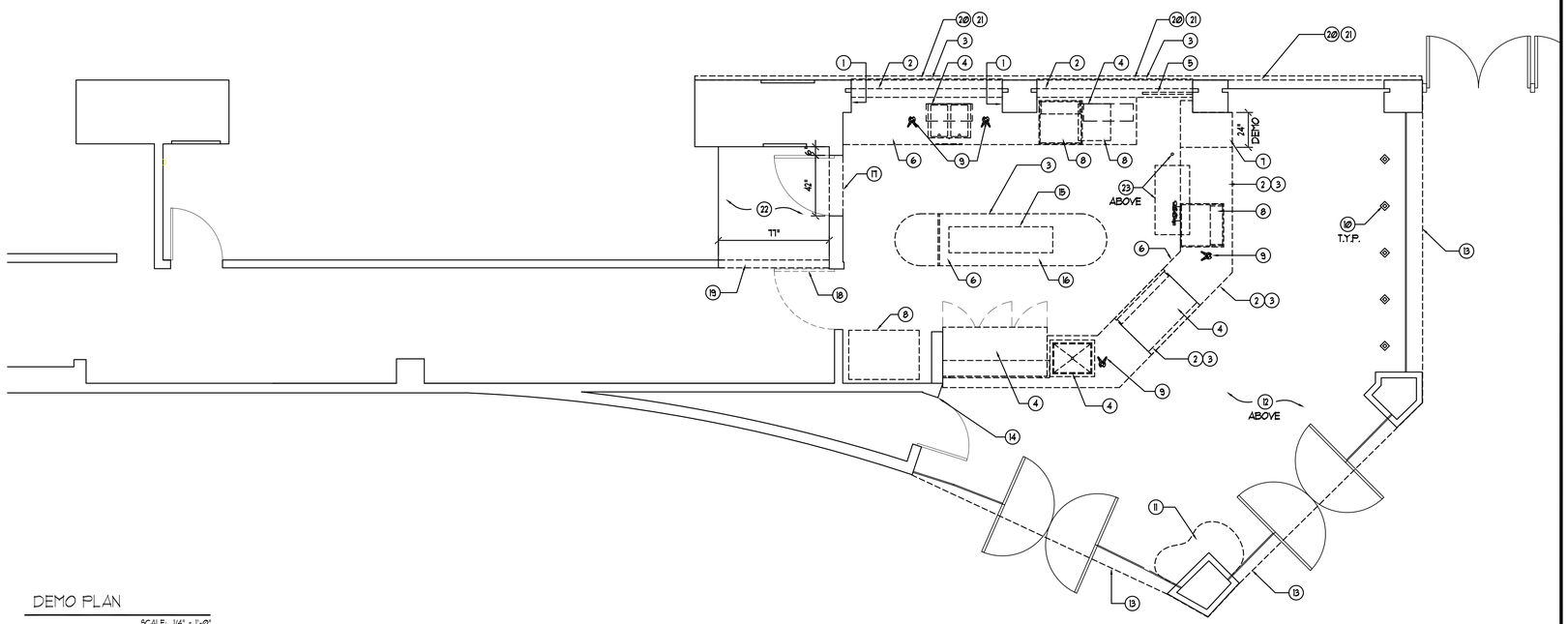

DEMO PLAN

SCALE: 1/4" = 1'-0"

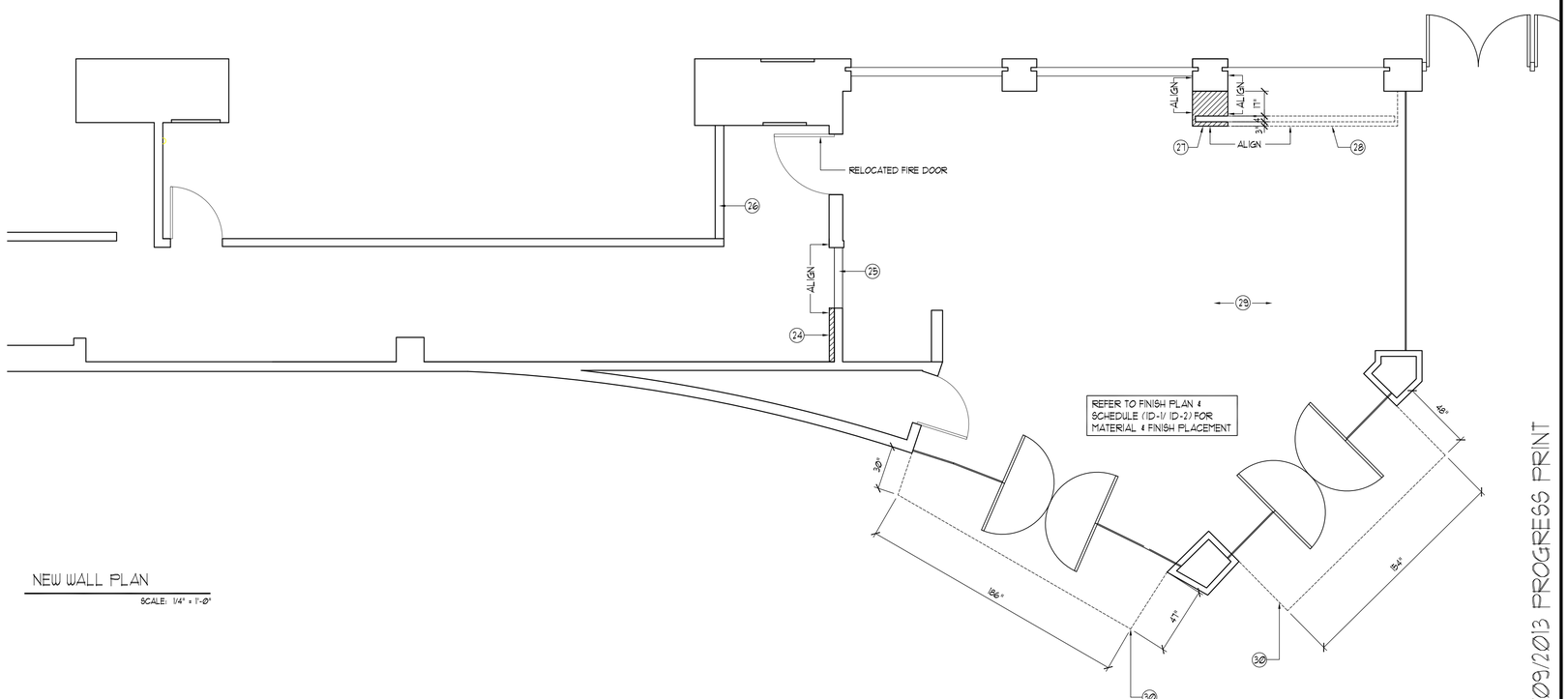

NEW WALL PLAN

SCALE: 1/4" = 1'-0"

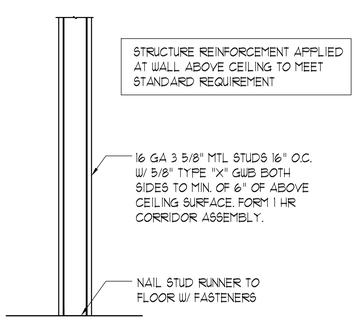

NEW PARTITION WALL SECTION

(TYP.)

08/09/2013 PROGRESS PRINT

BARGREEN ELLINGSON
CONSTRUCTION SUPPLY & DESIGN
3232 NW INDUSTRIAL STREET
PORTLAND, OR 97210
Phone: (503) 227-1161
Fax: (503) 345-0738
Website
www.bargreen.com

OREGON CONVENTION CENTER DRAGON CAFE REMODEL

777 NE MLK BLVD.
PORTLAND, OR 97232

RELEASE INFORMATION

#	DATE
0	02/07/2013
1	----
2	----
3	----
4	----
5	----
6	----
7	----
8	----

This plan is the property of Bargreen Ellingson and is loaned subject to the condition that it is not to be copied, reproduced, or distributed either in whole or in part, without written permission, and is not to be used in any way detrimental to the best interests of the company.

© 2009 BARGREEN ELLINGSON INC.

DRAWN BY: TJ/SM

PROJECT MANAGER: Jeremy Edmondson

SHEET TITLE: DEMO & NEW WALL PLAN

SHEET NUMBER: K-2

3 OF 12

PROJECT NUMBER: H-061

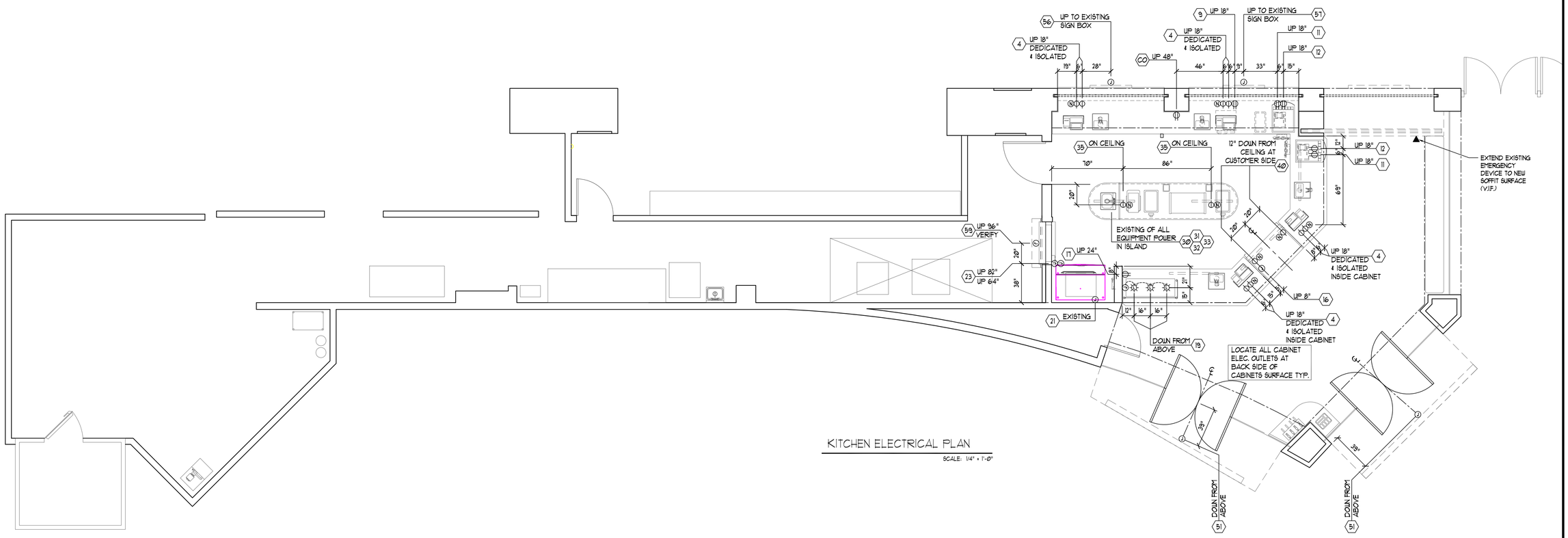

KITCHEN ELECTRICAL PLAN

SCALE: 1/4" = 1'-0"

ELECTRICAL LEGEND

SYMBOL	DESCRIPTION
J	JUNCTION BOX
D	DUPLEX OUTLET (DCO)
D	DEDICATED / ISOLATED
	LIGHT FIXTURE
	FIELD CONNECTION
N	P.O.S. NETWORK CONNECTION
CO	120/1ø/15 AMP CONVENIENCE OUTLET

ELECTRICAL NOTES

1. ALL ELECTRICAL ROUGH-IN WORK AND FINAL CONNECTIONS TO ALL FOOD SERVICE AND RELATED EQUIPMENT AS SHOWN ON THE KITCHEN EQUIPMENT CONTRACTOR'S PLANS TO BE PERFORMED BY THE ELECTRICAL CONTRACTOR PER NATIONAL AND LOCAL CODES.

2. THE ELECTRICAL CONTRACTOR SHALL PROVIDE AND INSTALL STAINLESS STEEL OUTLET AND RECEPTACLE COVERS IN SERVICE AREAS.

3. THE ELECTRICAL CONNECTIONS, SPECIFICATIONS AND DIMENSIONS SHOWN ON THESE PLANS ARE FOR FOOD SERVICE EQUIPMENT ONLY. SEE THE CONSULTANT'S DRAWINGS FOR ADDITIONAL ELECTRICAL REQUIREMENTS INCLUDING OFFICE, MENU BOARDS, TELEPHONE AND DATA LINES, ETC.

4. THE ELECTRICAL CONTRACTOR SHALL PROVIDE FUSED DISCONNECTS FOR EQUIPMENT HOOK-UPS AS REQUIRED BY CODE AND LABELING.

5. ALL ELECTRICAL ROUGH-IN WORK AND ALL FINAL CONNECTIONS FOR ALL ITEMS SHOWN AND SPECIFIED ON THESE PLANS BY BARGREEN ELLINGSON SHALL BE PERFORMED BY THE ELECTRICAL CONTRACTOR.

6. UNLESS OTHERWISE SPECIFIED IN THESE PLANS OR OTHER WRITTEN CONTRACTS, IT SHALL BE THE RESPONSIBILITY OF THE ELECTRICAL CONTRACTOR TO PROVIDE ALL ELECTRICAL-TYPE MATERIALS INCLUDING, BUT NOT LIMITED TO: WIRING, SWITCHES, DISCONNECTS, FLEX, CONDUIT, CONTACTORS, TRANSFORMERS, THERMAL OVERLOAD PROTECTORS, MAGNETIC STARTERS, SHUNT TRIP BREAKERS, ELECTRICAL PANELS, CORDS, PLUGS, COVERS, ETC.

7. ELECTRICAL CONTRACTOR SHALL PROVIDE THE KITCHEN EQUIPMENT CONTRACTOR WITH ELECTRICAL PANEL(S) SIZE AND LOCATION ALONG WITH AVAILABLE VOLTAGE AND PHASE.

8. THE ELECTRICAL CONTRACTOR SHALL FURNISH AND INSTALL ALL ELECTRICAL COMPONENTS FOR WALK-IN REFRIGERATORS AND FREEZERS INCLUDING, BUT NOT LIMITED TO: LIGHTS, DOOR VENTS, SOLENOIDS, TIME CLOCKS, DEFROST CIRCUITS AND INTERCONNECTIONS BETWEEN REMOTE COMPRESSORS AND INTERIOR MOUNTED EVAPORATOR COILS. ELECTRICAL SHALL ALSO PROVIDE DISCONNECTS AND THERMO-OVERLOAD PROTECTION FOR COMPRESSORS.

9. THE ELECTRICAL CONTRACTOR SHALL PROVIDE AND INSTALL HEAT TAPE ON DRAIN LINES IN DANGER OF FREEZING. VERIFY LENGTH WITH REFRIGERATION CONTRACTOR.

10. THE ELECTRICAL CONTRACTOR SHALL PROVIDE DISCONNECTS AT THE POWER BOX FOR EACH ICE MACHINE HEAD.

11. ELECTRICAL CONTRACTOR SHALL VERIFY REQUIREMENTS OF CASH REGISTERS, PRINTERS, COMPUTERS, SOUND SYSTEM, ETC. INCLUDING CONDUIT RUNS AND DEDICATED / ISOLATED OUTLET REQUIREMENTS.

12. ALL DIMENSIONS SHOWN ARE FROM GRID LINES, FINISHED WALLS OR FINISHED FLOORS TO CENTER LINE OF ELECTRICAL OUTLET BOXES. HEIGHTS ARE NOT TO BE TAKEN FROM CURBS OR PLATFORMS.

BARGREEN ELLINGSON
FOODSERVICE SUPPLIES & DESIGN
3232 NW INDUSTRIAL STREET
PORTLAND, OR 97210
Phone: (503) 227-1161
Fax: (503) 345-0738
Website
www.bargreen.com

OREGON CONVENTION CENTER
DRAGON CAFE REMODEL
777 NE MLK BLVD.
PORTLAND, OR 97232

RELEASE INFORMATION

#	DATE
0	02/07/2013
1	----
2	----
3	----
4	----
5	----
6	----
7	----
8	----

This plan is the property of Bargreen Ellingson and is loaned subject to the condition that it is not to be copied, reproduced, or distributed either in whole or in part, without written permission, and is not to be used in any way detrimental to the best interests of the company.

© 2009 BARGREEN ELLINGSON INC.

DRAWN BY: TJ/SM

PROJECT MANAGER: Jeremy Edmondson

SHEET TITLE: ELECTRICAL ROUGH-IN PLAN

SHEET NUMBER: K-3

4 OF 12

PROJECT NUMBER: H-061

08/09/2013 PROGRESS PRINT

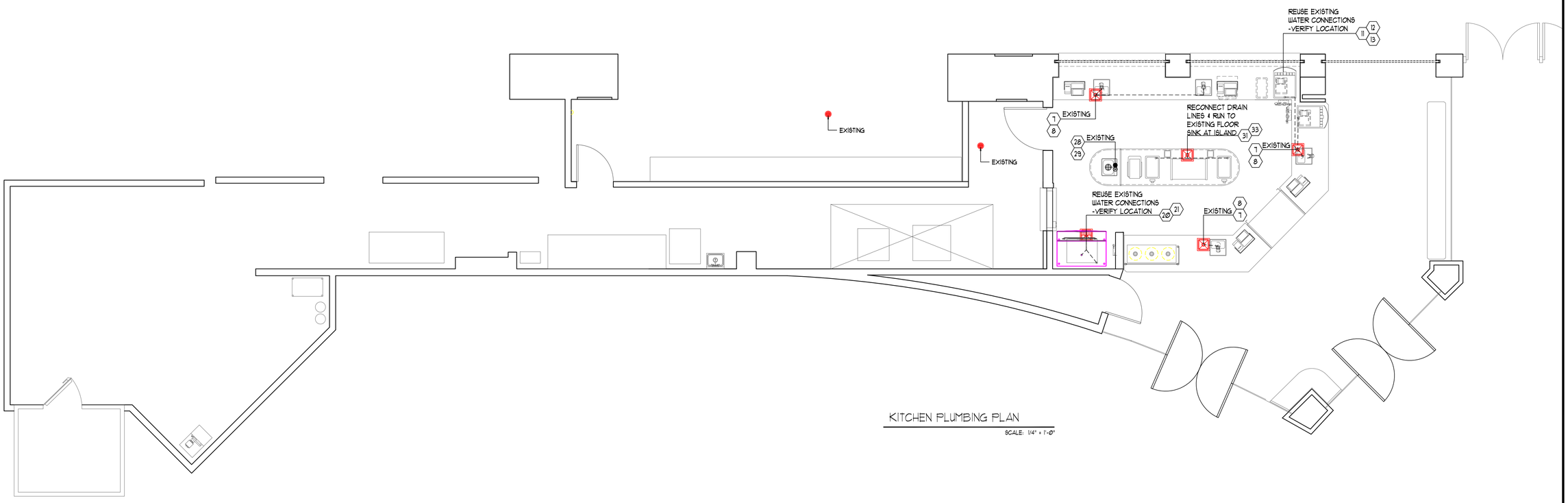

KITCHEN PLUMBING PLAN

SCALE: 1/4" = 1'-0"

PLUMBING NOTES

1. ALL PLUMBING ROUGH-IN WORK AND FINAL CONNECTIONS TO ALL FOOD SERVICE AND RELATED EQUIPMENT AS SHOWN ON THE KITCHEN EQUIPMENT CONTRACTOR'S PLANS TO BE PERFORMED BY THE PLUMBING CONTRACTOR PER NATIONAL AND LOCAL CODES.

2. UNLESS OTHERWISE SPECIFIED IN THESE PLANS OR OTHER WRITTEN CONTRACTS, IT SHALL BE THE RESPONSIBILITY OF THE PLUMBING CONTRACTOR TO PROVIDE ALL PLUMBING-TYPE MATERIALS INCLUDING VALVES, TRAPS, LINE STRAINERS, FLOOR SINK COVERS, PRESSURE REGULATORS, SIPHON BREAKERS, ETC.

3. PLUMBING CONTRACTOR SHALL SIZE, FURNISH AND INSTALL ALL GREASE TRAPS OR INTERCEPTORS AS REQUIRED AND COORDINATE SIZES AND LOCATIONS WITH KITCHEN EQUIPMENT CONTRACTOR.

4. PLUMBING CONTRACTOR SHALL FURNISH AND INSTALL ALL GAS SHUT-OFF VALVES FOR EACH PIECE OF EQUIPMENT WITH PERMANENT I.D. TAGS AS WELL AS THE MAIN GAS VALVE(S).

5. PLUMBING CONTRACTOR SHALL FURNISH AND INSTALL ALL DIRECT SINK WASTE LINES AND ALL INDIRECT EQUIPMENT WASTE LINES AS SHOWN ON PLANS PER LOCAL CODES, INCLUDING TRAPS, TAIL PIECES, LINE STRAINERS, AND WALK-IN CONDENSATE WASTE LINES, AS REQUIRED. INDIRECT WASTE LINE ROUTING THROUGH CABINETS SHALL BE IN A MANNER SO AS TO MAXIMIZE USABLE STORAGE SPACE.

6. ALL DRAIN LINES FROM EQUIPMENT REQUIRING CONDENSATION REMOVAL SHALL BE RUN IN COPPER.

7. THE PLUMBING CONTRACTOR SHALL PROVIDE AND INSTALL INSULATION MATERIAL ON ALL DRAINLINES FROM ICE BINS, ICE PANS, ETC., SO AS TO ELIMINATE CONDENSATION FORMATION.

8. ALL INDIRECT WASTE LINES TO HAVE A 1" MINIMUM AIR GAP.

9. FLOOR SINKS SHALL BE FURNISHED AND INSTALLED BY THE PLUMBING CONTRACTOR IN LOCATIONS SHOWN, AND SUPPLIED WITH 3/4 GRATE OR AS SPECIFIED. AREA DRAINS, IF REQUIRED, SHALL BE VERIFIED WITH THE ARCHITECT.

10. IT SHALL BE THE RESPONSIBILITY OF THE GENERAL CONTRACTOR TO VERIFY THAT THE LOCATIONS FOR ALL MECHANICAL REQUIREMENTS WHICH REQUIRE FLOOR PENETRATIONS DO NOT CONFLICT WITH STRUCTURAL MEMBERS IN THE FLOOR.

11. THE GENERAL CONTRACTOR SHALL SUPERVISE THE LOCATION OF ALL FLOOR DRAINS ON THE JOB SITE SO AS TO ENSURE THE BEST SLOPE POSSIBLE OF THE SURROUNDING FLOOR TO THESE DRAINS.

12. PLUMBER SHALL FURNISH AND INSTALL PRESSURE REDUCING VALVE(S) AT DISHWASHER(S), GLASS WASHER(S), STEAMER(S) AND OTHER EQUIPMENT, AS REQUIRED.

13. IT SHALL BE THE RESPONSIBILITY OF THE PLUMBING CONTRACTOR TO FURNISH AND INSTALL ALL WATER HEATERS FOR THIS PROJECT AND TO ENSURE ADEQUATE WATER SUPPLY FOR THE FOOD SERVICE EQUIPMENT. WATER TEMPERATURE TO THE DISHWASHER SHALL BE 140°. COORDINATE LOCATION OF WATER HEATER WITH KITCHEN EQUIPMENT CONTRACTOR.

14. THE PLUMBING CONNECTIONS, SPECIFICATIONS AND DIMENSIONS SHOWN ON THESE PLANS ARE FOR FOOD SERVICE EQUIPMENT ONLY. SEE ARCHITECT'S PLAN SET FOR ALL OTHER PLUMBING REQUIREMENTS FOR THIS PROJECT.

BARGREEN ELLINGSON
FOODSERVICE SUPPLY & DESIGN
3232 NW INDUSTRIAL STREET
PORTLAND, OR 97210
Phone: (503) 227-1161
Fax: (503) 345-0738
Website
www.bargreen.com

OREGON CONVENTION CENTER
DRAGON CAFE REMODEL
777 NE MLK BLVD.
PORTLAND, OR 97232

RELEASE INFORMATION

#	DATE
0	02/07/2013
1	----
2	----
3	----
4	----
5	----
6	----
7	----
8	----

This plan is the property of Bargreen Ellingson and is loaned subject to the condition that it is not to be copied, reproduced, or distributed either in whole or in part, without written permission, and is not to be used in any way detrimental to the best interests of the company.

© 2009 BARGREEN ELLINGSON INC.

DRAWN BY:
TJ/SM

PROJECT MANAGER:
Jeremy Edmondson

SHEET TITLE:

PLUMBING ROUGH-IN PLAN

SHEET NUMBER

K-4

5 OF 12

PROJECT NUMBER

H-061

08/09/2013 PROGRESS PRINT

MERC CONTRACT NO 304013

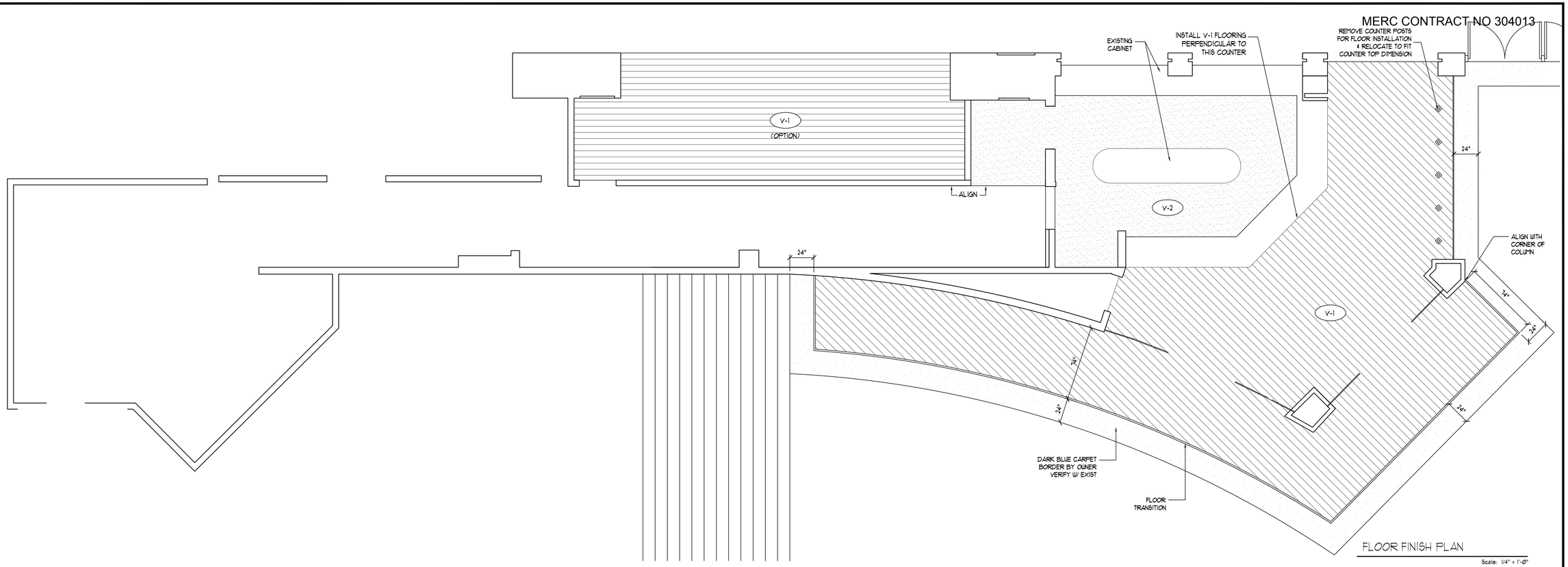

FLOOR FINISH PLAN

Scale: 1/4" = 1'-0"

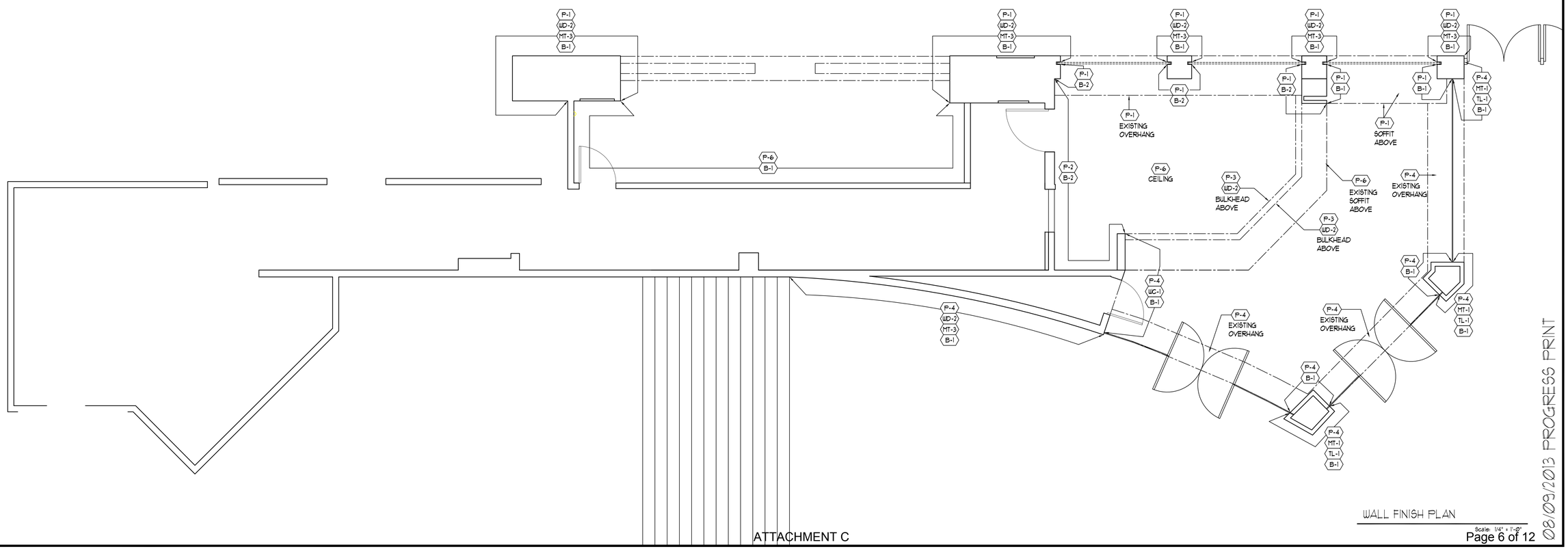

WALL FINISH PLAN

Scale: 1/4" = 1'-0"

08/09/2013 PROGRESS PRINT

BARGREEN ELLINGSON
FOODSERVICE SUPPLY & DESIGN
3232 NW INDUSTRIAL STREET
PORTLAND, OR 97210
Phone: (503) 227-1161
Fax: (503) 345-0738
Website
www.bargreen.com

OREGON CONVENTION CENTER DRAGON CAFE REMODEL

777 NE MLK BLVD.
PORTLAND, OR 97232

RELEASE INFORMATION

#	DATE
0	02/07/2013
1	----
2	----
3	----
4	----
5	----
6	----
7	----
8	----

This plan is the property of Bargreen Ellingson and is loaned subject to the condition that it is not to be copied, reproduced, or distributed either in whole or in part, without written permission, and is not to be used in any way detrimental to the best interests of the company.

© 2009 BARGREEN ELLINGSON INC.

DRAWN BY:
TJ/SM

PROJECT MANAGER:
Jeremy Edmondson

SHEET TITLE:

FINISH PLAN

SHEET NUMBER

ID-1

6 OF 12

PROJECT NUMBER

H-061

FINISH SCHEDULE

PLASTIC LAMINATE

KEY	MATERIAL	MFG.	PRODUCT #	DESCRIPTION	NOTE
PL-1	INSIDE CABINETS SURFACE, ISLAND CABINET SURFACE	Pionite Nancy Garman 650-207-7735	WX 110 Suede Smooth Paddlin	0.05" Thick Plastic laminate Grains to run vertically.	2
PL-2	HALL SIDE EXISTING WOOD SIGN BOXES @ EACH WINDOW	Abet Laminati Analena Shepherd 510-567-1400	3051 Tefor TCD-Mustard Giallo	100 % Recycled & Recyclable thermoplastic over existing sign boxes. To be applied to all visible surfaces.	2
PL-3	STAND UP COUNTER	Nevamar Panolam Industries Pam Walker 800-638-4380	NOISE STATIC ND0028-PV Bark	Seam line at center of table.	2
PL-4	CONDIMENT COUNTER	Nevamar Panolam Industries Pam Walker 800-638-4380	Amber Green Hautelink HLG002T Textured	0.05" Thick Plastic laminate at all visible surfaces	2

METAL

MT-1	FRONT COUNTER SURFACE HORIZONTAL TRIM, CANOPY FRAME & FACADE CHAIR RAIL	CHOICE	Powder coat to match Mettle Mica AA-40 Dark Bronze	6" high 22 gauge stainless steel	2, 3
MT-2	COIL DRAPERY BARRIER	CASCADE COIL DRAPERY, INC. Andrew Schoenheit 971-224-2188	STL080160 Fabric, Steel ½"-16 ga.	2 way draw center openings w/ footbolt lock	2, 3
MT-3	EXTERIOR WAINSCOT	BY G.C.	2 1/2" by 1/4" Corrugated Metal Panel. 28 Gauge	Commercial grade Finish: Rusted w/ penetrol clear coat	2, 3
MT-4	COUNTER SURFACE TRIM	SCHLUTER	Quadec-E	3/8" Profile Metal Trim Finish: Brushed Antique Bronze Anodized Aluminum	2, 3

STONE/ QUARTZ

ST-1	COUNTER TOPS THROUGHOUT, SPLASH & POS SHROUD	ECO by COSENTINO	Terra	3/4" thick engineered black quartz with brown grains. 75% recycled materials. 63" x 128" slab cut to fit counter top dimensions. Polished finish w/ eased edge.	2, 3

TILE

TL-1	FRONT COUNTER & WINDOW COUNTER DIE WALL SURFACE EXTERIOR COLUMN WAINSCOTS	Oregon Tile and Marble	California Gold Gauged	Cut standard slate tile 12"x12" & 6"x6" sizes into 3"x3", 3"x6", 6"x6" & 6"x12" sizes. See Elevations for layout.	2, 3

WOOD STAIN FINISHES

WD-1	CANOPY UNDERSIDE SURFACE	Choice	TBD	6" W continued plank w/ butt joint Wood Species: Fir, clear vertical grain Grade: Custom Wood Stain: Clear Coat, Class A Fire Retardant	2, 3
WD-2	EXTERIOR WAINSCOT TRIMS & BULKHEAD BOTTOM TRIM	By G.C.	Choice	Solid wood in sizes noted on details. Wood Species: Hemlock Grade: Custom Wood Stain: Clear Coat, Class A Fire Retardant	2, 3

FINISH SCHEDULE NOTES:

1. VERIFY DIMENSIONS OF SPACE & QTY NEEDED BEFORE ORDERING PRODUCT.
2. QUANTITY/AMOUNT TO BE DETERMINED BY GENERAL CONTRACTOR OR FABRICATOR.
3. G.C. OR FABRICATOR TO SUPPLY FINISH SAMPLE FOR APPROVAL.
4. G.C. TO VERIFY EXISTING CONDITION TO ASSURE SMOOTH TRANSITION AND A SUITABLE MATCH.
5. INSTALLER TO BE FAMILIAR W/ INSTALLATION OF PRODUCT.
6. INSTALLER RESPONSIBLE FOR USING MFR. RECOMMENDED ADHESIVES & INSTALLATION METHODS.
7. USE APPROPRIATE TRANSITION STRIPS @ CHANGES IN FLOORING MATERIALS.

CEILING

KEY	MATERIAL	MFG.	PRODUCT #	DESCRIPTION	NOTE
CL-1	WOOD GRILLES CEILING	9 WOOD www.9wood.com Travis Cherry 888.767.9990	1000 S Wood Grille 1100 Style Cross Piece Grille 1124-3	Species: Western Hemlock (Solid, Mixed Grain) Size: 1⅜"x 3¼" (Net) 3 Members/Lineal Foot Finish: Clear Pre-Catalyzed Lacquer w/ Satin Sheen Fire Rating: Class 1 (A)	1, 2 3 5, 6

PAINT

P-1	HALL SIDE WALLS, COLUMNS & SOFFIT	Sherwin Williams	SW 0043 Peristyle Brass Match to Miller Specs	Water based latex paint. Eggshell finish. Color: Medium Olive Primer & two finish coats required	2
P-2	BACK WALL @ PASS WINDOW	Sherwin Williams	SW 6062 Rugged Brown Match to Miller Specs	Water based latex paint. Eggshell finish. Color: Dark Reddish Brown Primer & two finish coats required	2
P-3	BULKHEAD AT RETAIL SIDE	Sherwin Williams	SW 6173 Cocoon Match to Miller Specs	Water based latex paint. Eggshell finish. Color: Dark Green Primer & two finish coats required	2
P-4	STOREFRONT FACADE & EXISTING OVERHANG	Sherwin Williams	SW 6173 Burlap Match to Miller Specs	Water based latex paint. Eggshell finish. Color: Medium Olive Green Primer & two finish coats required	2
P-5	FIRE DOOR	Sherwin Williams	SW 6062 Rugged Brown Match to Miller Specs	Paint appropriate for metal door surface Color: Dark Reddish Brown Primer & two finish coats required	2
P-6	EXISTING CEILING	Sherwin Williams	SW 6156 Ramie Match to Miller Specs	Water based latex paint. Eggshell finish. Color: Beige Primer & two finish coats required	2

WALL COVERING

WC-1	CUSTOM DIGITAL WALLCOVERING	MDC	Stipple texture vinyl wallcovering w/ printed image	Backing: Non woven Must be Class A & Meet flammability rating Design to be determined. customer to select/ approve image	1, 2

WALL BASE

B-1	WALL BASE THROUGHOUT	ROPPE	100 Black	⅛" thick x 6" H Vinyl base ASTM E 84, Surface Burning - Class B	1, 2
B-2	INTEGRAL COVE BASE	ALTRO	Altro Stronghold 30 Essential Collection Abyss K3001	Heavy duty slip resistant flooring base Thickness: 0.12" Application followed per manufacturer's instructions.	1, 2

FLOOR

KEY	MATERIAL	MFG.	PRODUCT #	DESCRIPTION	NOTE
V-1	FLOORING AT RETAIL AREA	CENTIVA	Contour Plank CP-0301-C Vintage Cabin	6"x36" Class III Vinyl tile. 100% Recyclable 1/8" Thick w/ Square edge. Installation Method: Staggered See floor finish plan for layout. Application followed per manufacturer's instructions.	1, 4, 6,7
V-2	FLOORING BEHIND COUNTERS	ALTRO 800-941-1696	Altro Stronghold 30 Essential Collection Abyss K3001	Heavy duty slip resistant flooring Thickness: 0.12" Roll Length: 49' Width: 6'-7" Application followed per manufacturer's instructions.	1, 4, 5, 6,7

08/09/2013 PROGRESS PRINT

BARGREEN ELLINGSON
CONSULTING & SUPPLY & DESIGN
3232 NW INDUSTRIAL STREET
PORTLAND, OR 97210
Phone: (503) 227-1161
Fax: (503) 345-0738
Website
www.bargreen.com

OREGON CONVENTION CENTER
DRAGON CAFE REMODEL
777 NE MLK BLVD.
PORTLAND, OR 97232

RELEASE INFORMATION

#	DATE
0	02/07/2013
1	----
2	----
3	----
4	----
5	----
6	----
7	----
8	----

This plan is the property of Bargreen Ellingson and is loaned subject to the condition that it is not to be copied, reproduced, or distributed either in whole or in part, without written permission, and is not to be used in any way detrimental to the best interests of the company.
© 2009 BARGREEN ELLINGSON INC.

DRAWN BY: TJ/SM
PROJECT MANAGER: Jeremy Edmondson
SHEET TITLE: FINISH SCHEDULE
SHEET NUMBER: ID-2
7 OF 12
PROJECT NUMBER: H-061

MERC CONTRACT NO 304013

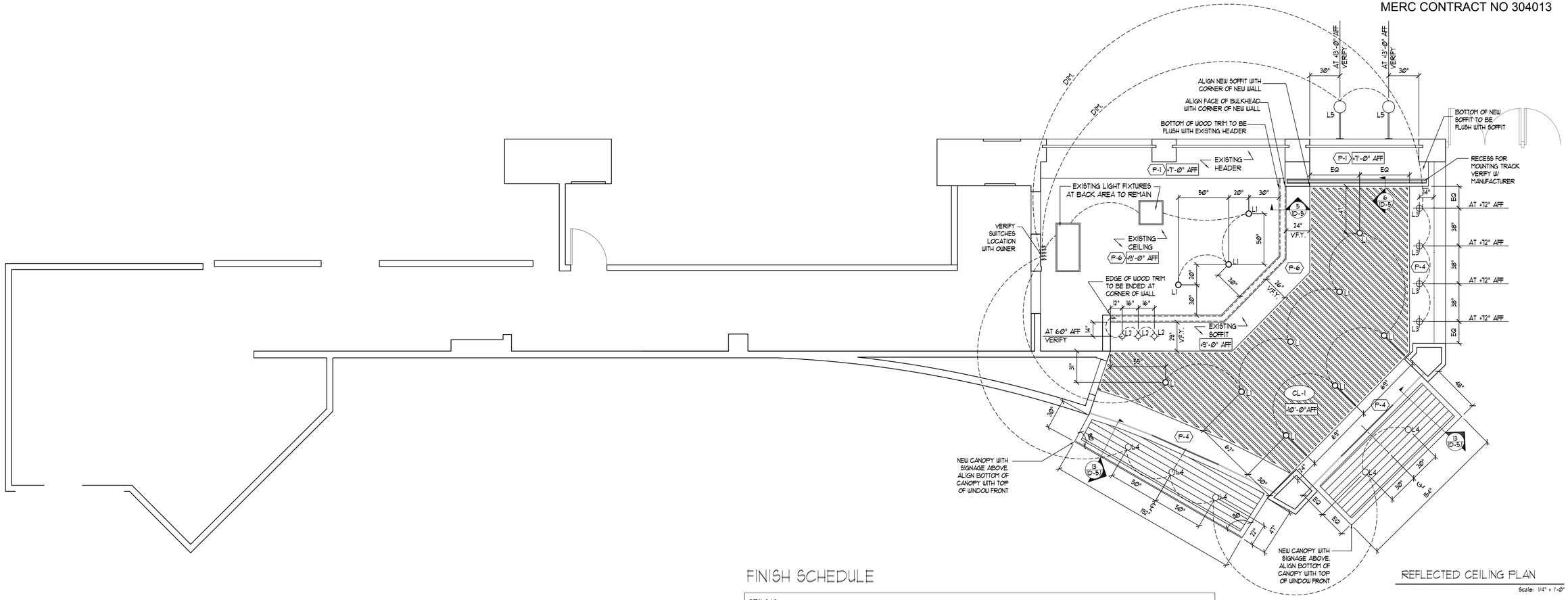

REFLECTED CEILING PLAN

Scale: 1/4" = 1'-0"

LIGHT LEGEND

SYMBOL	DESCRIPTION
	DOWN LIGHT
	HEAT LAMP
	PENDANT
	DOWN LIGHT AT CANOPY
	EXTERIOR WALL SCONCE
	2' x 2' EXISTING LIGHT
	2' x 4' EXISTING LIGHT

LIGHTING SCHEDULE

KEY	QTY	MFG./MODEL	DESCRIPTION	LAMP TYPE	NOTE
L-1	11	By G.C. MFG: Choice Model: Architectural grade	6" dia. recessed compact fluorescent down light with clear alzak reflector trim for general lighting Trim ring color: Black at retail Clear at employee area	42W DTT-Base, 4 pin Soft White CFL or Similar	1, 3
L-2	3	HATCO DL-760-RL Supplied by K.E.C.	Incandescent heat lamps over pizza counter w/ adjustable cord. Lamp shade color: Clear brushed metal Cord color: Black	200 W	1, 2, 3
L-3	4	KICHLER SADDLER MINI PENDANTS A 42225 OZ Contact: Kathy Irish 253-517-7880 kidesignresource@att.net	6" dia. decorative incandescent pendants over stand up counter w/ olde bronze finish and cased opal glass	50 W (G9) Dimmable	1, 3
L-4	5	By G.C. MFG: Choice Model: Architectural grade	6" dia. recessed compact fluorescent down light with clear alzak reflector trim at canopies Trim ring color: Black	26W DTT-Base, 4 pin Soft White CFL or Similar	1, 3
L-5	2	AMERICAN NAIL PLATE/ EMBLEM M714-41-E6-41-20 OGLFR-GUP-41-RT C-42WPL-41 OR EQUAL	Exterior wall sconce at hall side entrance above menu board Finish: Black or Architectural bronze	200 W incandescent base bulb Dimmable	1, 3

LIGHTING SCHEDULE NOTES:

1. ALL DIMENSIONS ARE TO BOTTOM OF FIXTURE, TYP.
2. PROVIDE BY K.E.C., INSTALL BY ELECTRICIAN.
3. CLIENT TO DETERMINE LOCATION OF SWITCHES.

FINISH SCHEDULE

CEILING

KEY	MATERIAL	MFG.	PRODUCT #	DESCRIPTION	NOTE
CL-1	WOOD GRILLES CEILING	9 WOOD www.9wood.com	1000 S Wood Grille 1100 Style Cross Piece Grille 1124-3	Species: Western Hemlock (Solid, Mixed Grain) Size: 1⅜"x 3¼" (Net) 3 Members/Lineal Foot Finish: Clear Pre-Catalyzed Lacquer w/ Satin Sheen Fire Rating: Class 1 (A)	1, 2, 3 5, 6

PAINT

P-1	HALL SIDE WALLS, COLUMNS & SOFFIT	Sherwin Williams	SW 0043 Peristyle Brass Match to Miller Specs	Water based latex paint. Eggshell finish. Color: Medium Olive Primer & two finish coats required	2
P-2	BACK WALL @ PASS WINDOW	Sherwin Williams	SW 6062 Rugged Brown Match to Miller Specs	Water based latex paint. Eggshell finish. Color: Dark Reddish Brown Primer & two finish coats required	2
P-3	BULKHEAD AT RETAIL SIDE	Sherwin Williams	SW 6173 Cocoon Match to Miller Specs	Water based latex paint. Eggshell finish. Color: Dark Green Primer & two finish coats required	2
P-4	STOREFRONT FACADE & EXISTING OVERHANG	Sherwin Williams	SW 6173 Burlap Match to Miller Specs	Water based latex paint. Eggshell finish. Color: Medium Olive Green Primer & two finish coats required	2
P-5	FIRE DOOR	Sherwin Williams	SW 6062 Rugged Brown Match to Miller Specs	Paint appropriate for metal door surface Color: Dark Reddish Brown Primer & two finish coats required	2
P-6	EXISTING CEILING	Sherwin Williams	SW 6156 Ramie Match to Miller Specs	Water based latex paint. Eggshell finish. Color: Beige Primer & two finish coats required	2

FINISH SCHEDULE NOTES:

1. VERIFY DIMENSIONS OF SPACE & QTY NEEDED BEFORE ORDERING PRODUCT.
2. QUANTITY/AMOUNT TO BE DETERMINED BY GENERAL CONTRACTOR OR FABRICATOR.
3. G.C. OR FABRICATOR TO SUPPLY FINISH SAMPLE FOR APPROVAL.
4. G.C. TO VERIFY EXISTING CONDITION TO ASSURE SMOOTH TRANSITION AND A SUITABLE MATCH.
5. INSTALLER TO BE FAMILIAR W/ INSTALLATION OF PRODUCT.
6. INSTALLER RESPONSIBLE FOR USING MFR. RECOMMENDED ADHESIVES & INSTALLATION METHODS.

BARGREEN ELLINGSON
FOODSERVICE SUPPLY & DESIGN
3232 NW INDUSTRIAL STREET
PORTLAND, OR 97210
Phone: (503) 227-1161
Fax: (503) 345-0738
Website
www.bargreen.com

OREGON CONVENTION CENTER DRAGON CAFE REMODEL

777 NE MLK BLVD.
PORTLAND, OR 97232

RELEASE INFORMATION

#	DATE
0	02/07/2013
1	----
2	----
3	----
4	----
5	----
6	----
7	----
8	----

This plan is the property of Bargreen Ellingson and is loaned subject to the condition that it is not to be copied, reproduced, or distributed either in whole or in part, without written permission, and is not to be used in any way detrimental to the best Interests of the company.

© 2009 BARGREEN ELLINGSON INC.

DRAWN BY: TJ/SM

PROJECT MANAGER: Jeremy Edmondson

SHEET TITLE: REFLECTED CEILING PLAN

SHEET NUMBER: ID-3

8 OF 12

PROJECT NUMBER: H-061

08/09/2013 PROGRESS PRINT

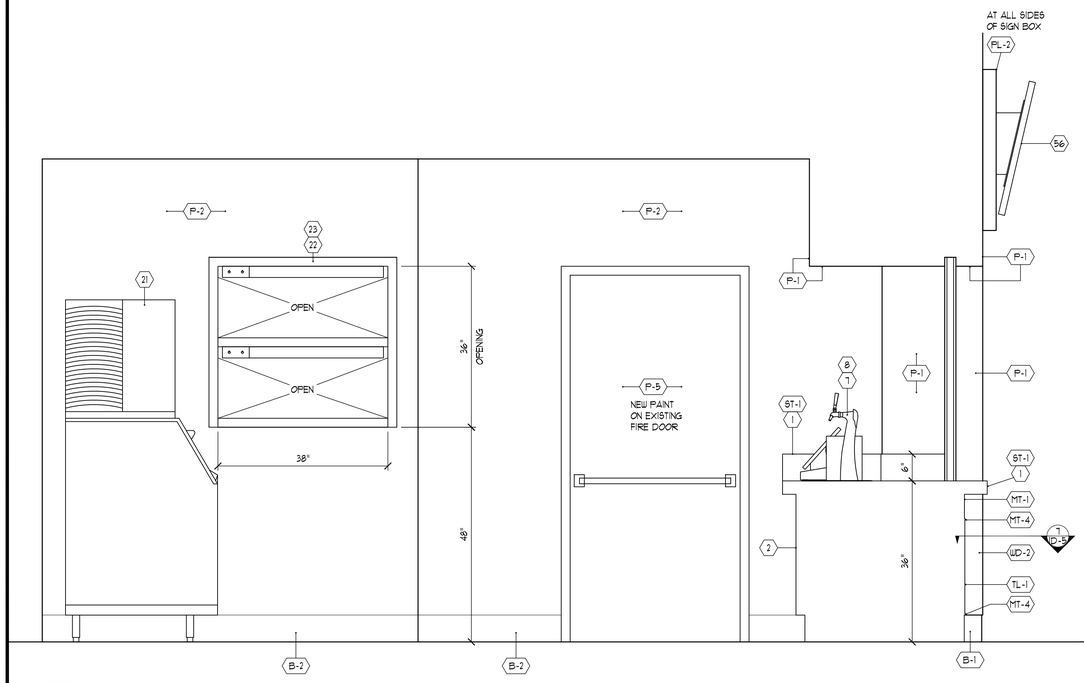

1 ELEVATION
PICK UP WINDOW SCALE: 3/4"=1'-0"

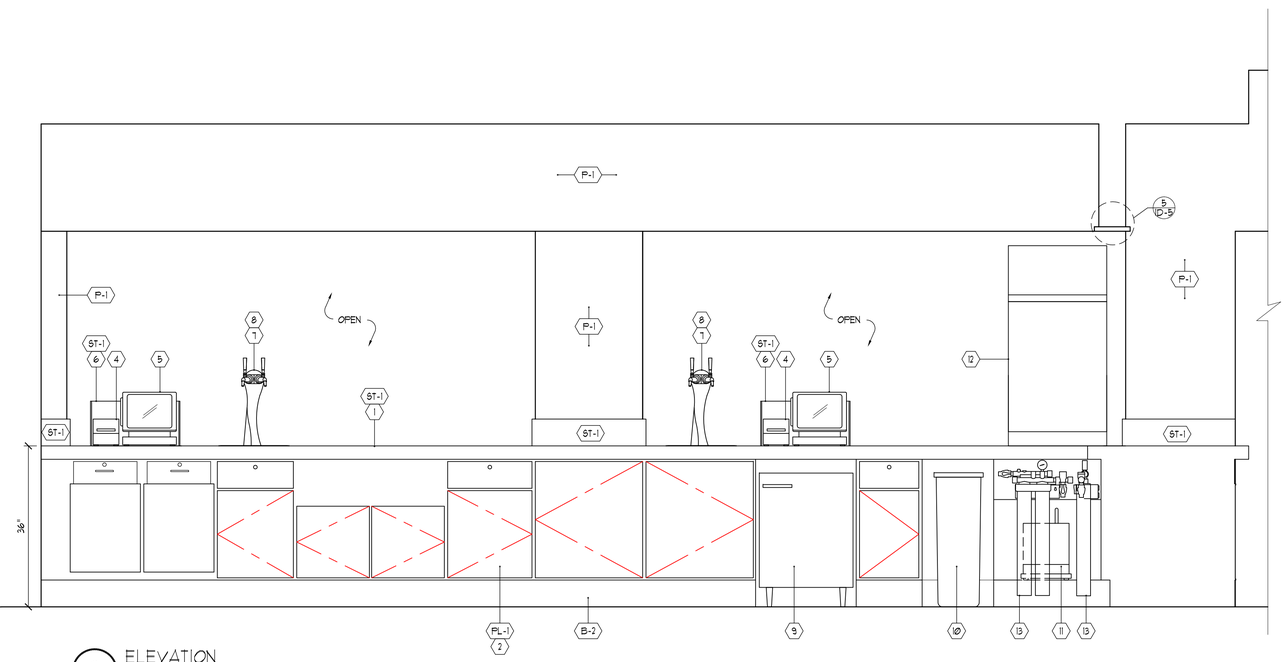

2 ELEVATION
WINDOW COUNTER-EMPLOYEE SIDE SCALE: 3/4"=1'-0"

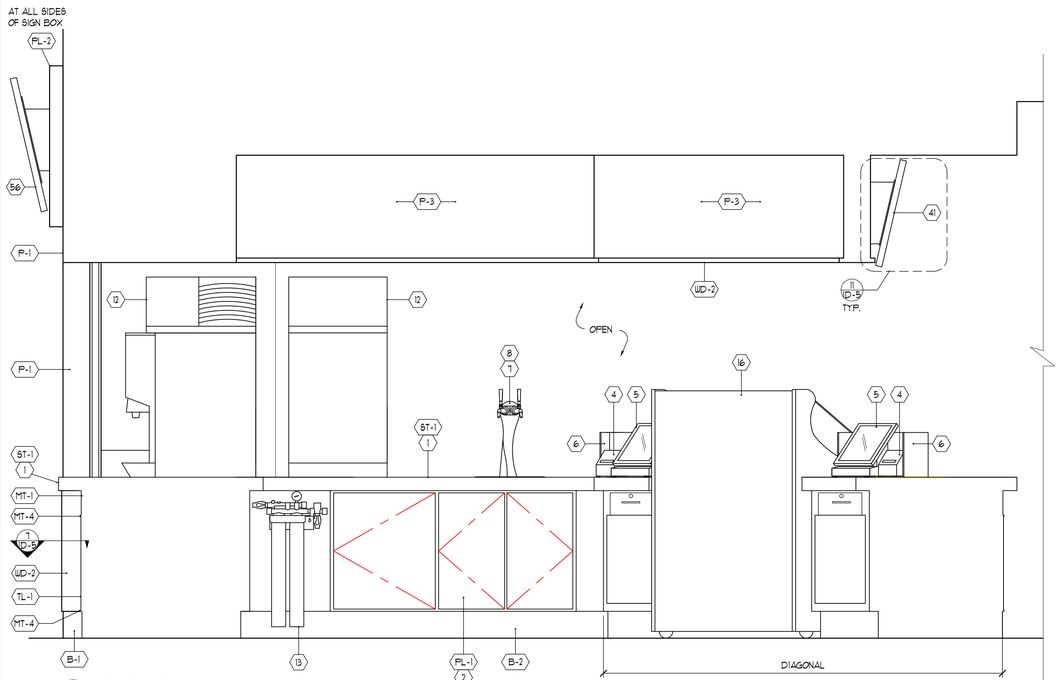

3 ELEVATION
BEVERAGE / ORDER COUNTER-EMPLOYEE SIDE SCALE: 3/4"=1'-0"

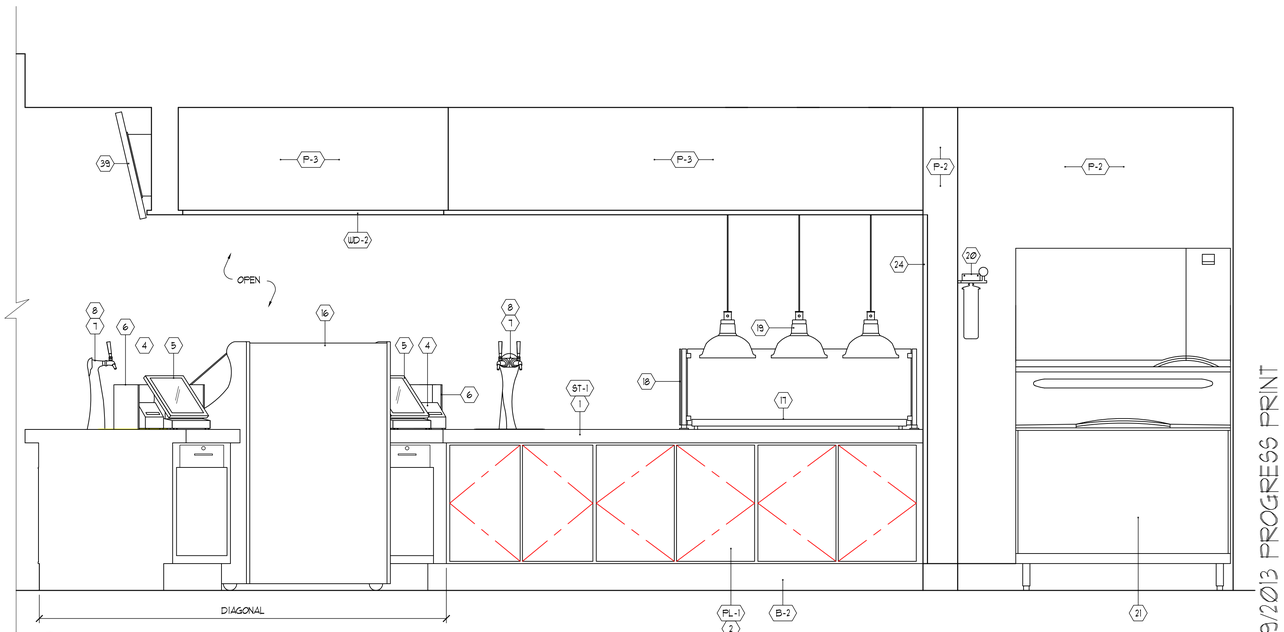

4 ELEVATION
PIZZA COUNTER-EMPLOYEE SIDE SCALE: 3/4"=1'-0"

08/09/2013 PROGRESS PRINT

BARGREEN ELLINGSON
FOODSERVICE SUPPLY & DESIGN
3232 NW INDUSTRIAL STREET
PORTLAND, OR 97210
Phone: (503) 227-1161
Fax: (503) 345-0738
Website
www.bargreen.com

OREGON CONVENTION CENTER DRAGON CAFE REMODEL

777 NE MLK BLVD.
PORTLAND, OR 97232

RELEASE INFORMATION

#	DATE
0	02/07/2013
1	----
2	----
3	----
4	----
5	----
6	----
7	----
8	----

This plan is the property of Bargreen Ellingson and is loaned subject to the condition that it is not to be copied, reproduced, or distributed either in whole or in part, without written permission, and is not to be used in any way detrimental to the best interests of the company.
© 2009 BARGREEN ELLINGSON INC.

DRAWN BY:
TJ/SM

PROJECT MANAGER:
Jeremy Edmondson

SHEET TITLE:
INTERIOR ELEVATIONS

SHEET NUMBER
ID-4
9 OF 12

PROJECT NUMBER
H-061

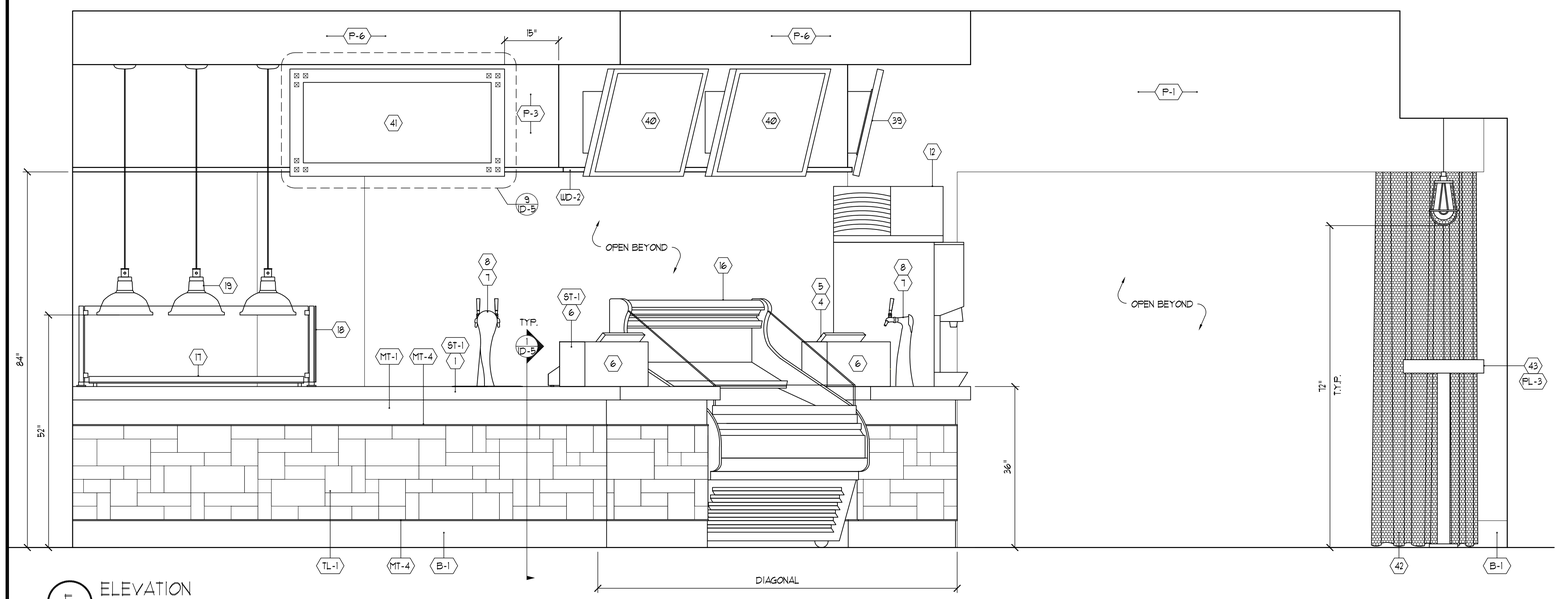

5 ELEVATION
PIZZA COUNTER-CUSTOMER SIDE
SCALE: 3/4"=1'-0"

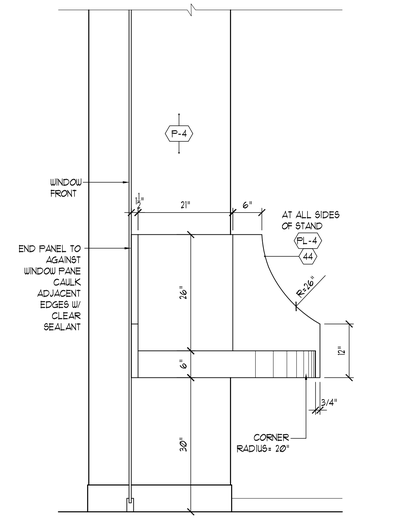

6 ELEVATION
CONDIMENT STAND LEFT SIDE
SCALE: 3/4"=1'-0"

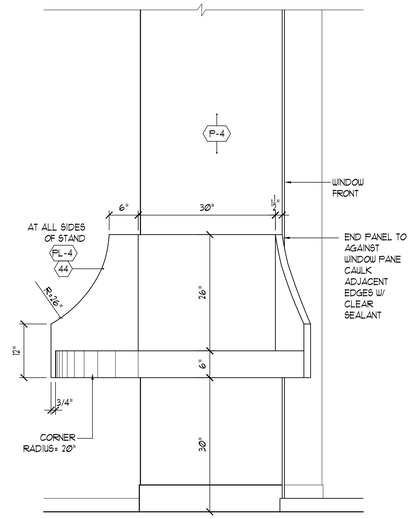

6.1 ELEVATION
CONDIMENT STAND RIGHT SIDE
SCALE: 3/4"=1'-0"

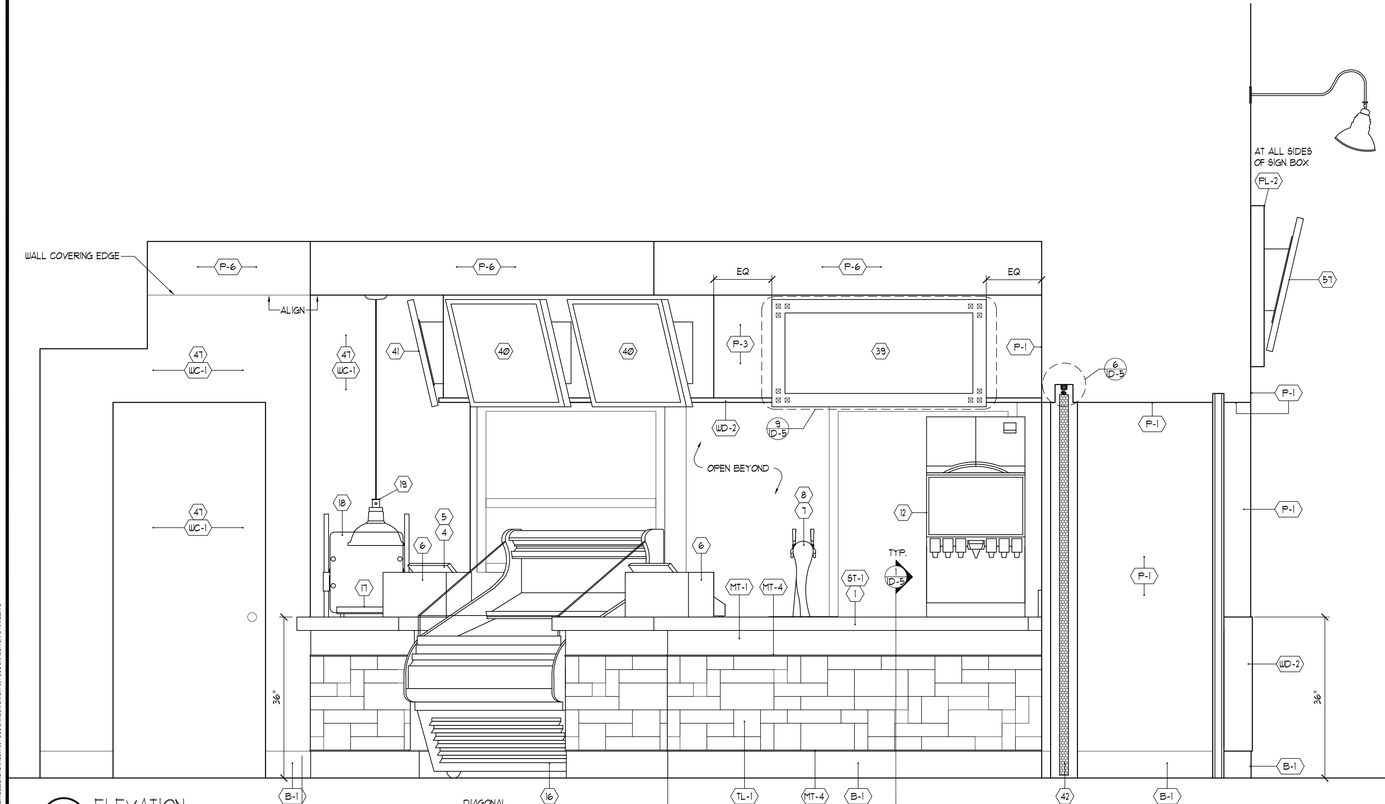

7 ELEVATION
BEVERAGE COUNTER-CUSTOMER SIDE
SCALE: 3/4"=1'-0"

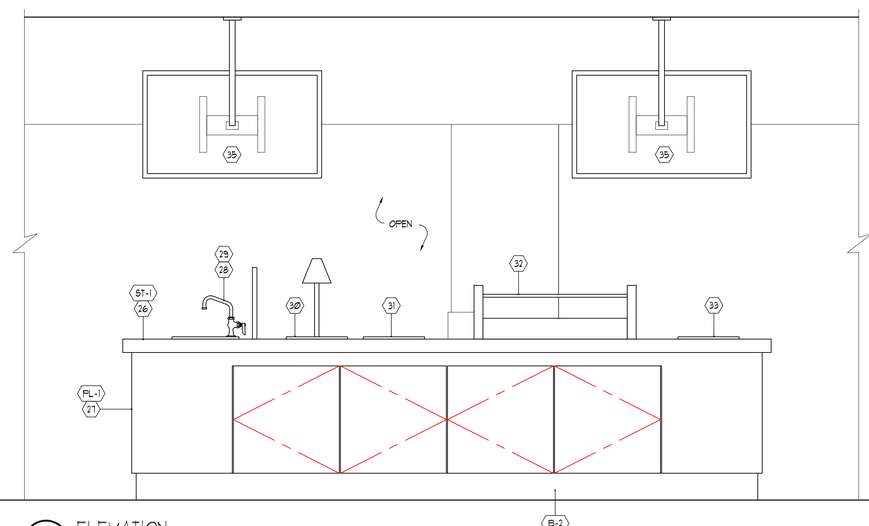

8 ISLAND COUNTER
ISLAND COUNTER
SCALE: 3/4"=1'-0"

08/09/2013 PROGRESS PRINT

BARGREEN ELLINGSON
FOODSERVICE SUPPLY & DESIGN
3232 NW INDUSTRIAL STREET
PORTLAND, OR 97210
Phone: (503) 227-1161
Fax: (503) 345-0738
Website
www.bargreen.com

OREGON CONVENTION CENTER
DRAGON CAFE REMODEL

777 NE MLK BLVD.
PORTLAND, OR 97232

RELEASE INFORMATION

#	DATE
0	02/07/2013
1	----
2	----
3	----
4	----
5	----
6	----
7	----
8	----

This plan is the property of Bargreen Ellingson and is loaned subject to the condition that it is not to be copied, reproduced, or distributed either in whole or in part, without written permission, and is not to be used in any way detrimental to the best Interests of the company.
© 2009 BARGREEN ELLINGSON INC.

DRAWN BY:
TJ/SM

PROJECT MANAGER:
Jeremy Edmondson

SHEET TITLE:
INTERIOR ELEVATIONS

SHEET NUMBER
ID-4.1
10 OF 12

PROJECT NUMBER
H-061

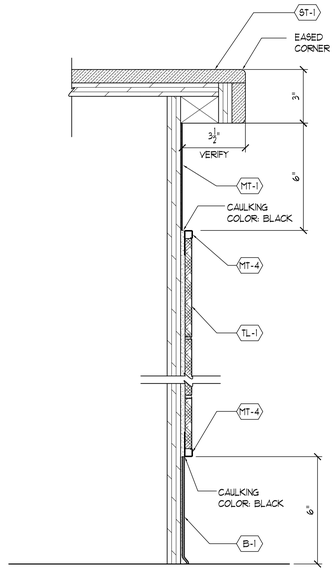

1 SECTION
FRONT COUNTER SCALE: 3"=1'-0"

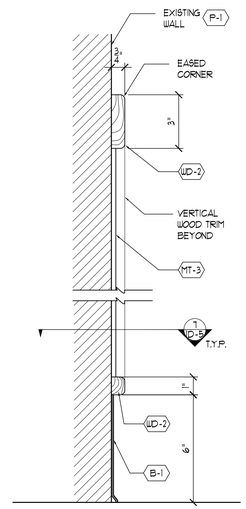

2 SECTION
HALL SIDE WAINSCOT SCALE: 3"=1'-0"

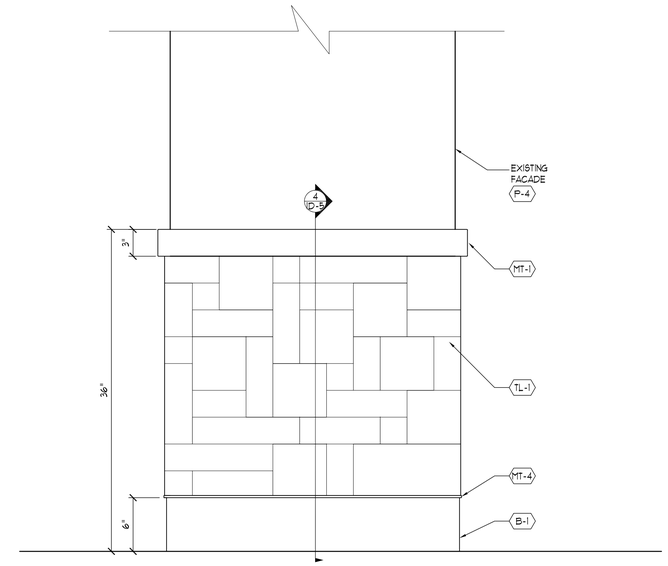

3 ENLARGED ELEVATION
FACADE WAINSCOT (T.Y.P) SCALE: 1-1/2"=1'-0"

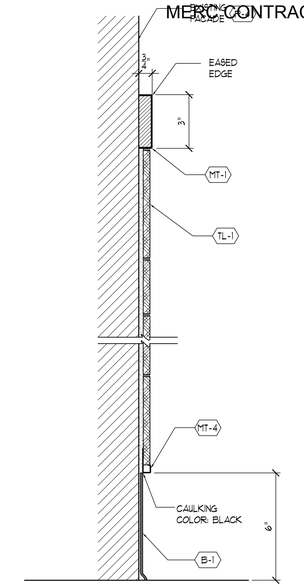

4 SECTION
FACADE WAINSCOT SCALE: 3"=1'-0"

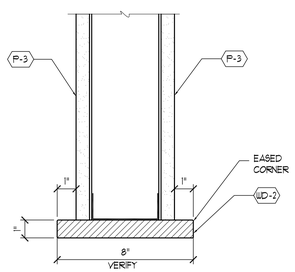

5 SECTION
BULKHEAD BOTTOM TRIM SCALE: 3"=1'-0"

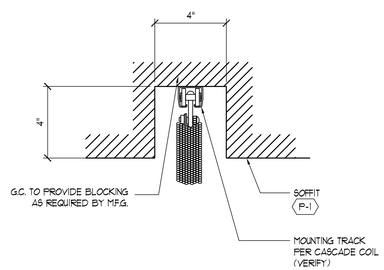

6 SECTION
COIL DRAPERY MOUNTING TRACK /RECESSED CEILING SCALE: 3"=1'-0"

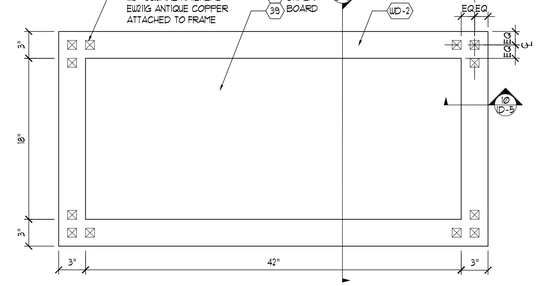

9 ENLARGED ELEVATION
CHALK MENU BOARD SCALE: 1-1/2"=1'-0"

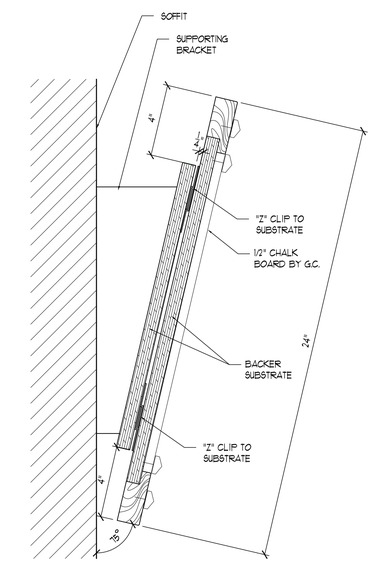

11 SECTION
CHALK BOARD MOUNTING DETAIL SCALE: 3"=1'-0"

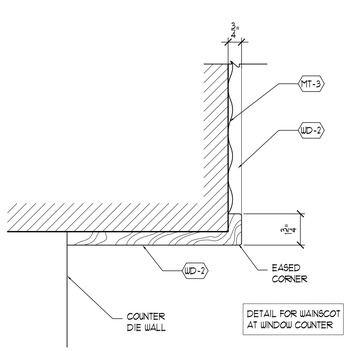

7 SECTION
HALL SIDE WAINSCOT WOOD TRIM @ DIE WALL (T.Y.P.) SCALE: 3"=1'-0"

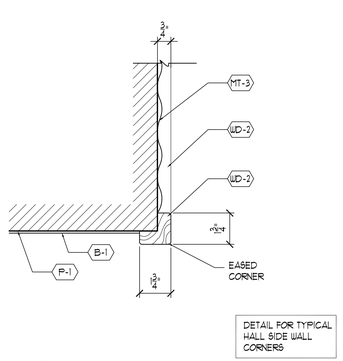

8 SECTION
HALL SIDE WAINSCOT CORNER WOOD TRIM (T.Y.P.) SCALE: 3"=1'-0"

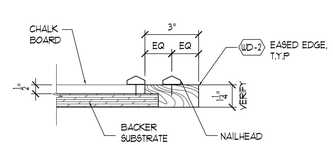

10 SECTION
CHALK BOARD FRAME SCALE: 3"=1'-0"

BARGREEN ELLINGSON
FOODSERVICE SUPPLY & DESIGN
3232 NW INDUSTRIAL STREET
PORTLAND, OR 97210
Phone: (503) 227-1161
Fax: (503) 345-0738
Website
www.bargreen.com

OREGON CONVENTION CENTER DRAGON CAFE REMODEL

777 NE MLK BLVD.
PORTLAND, OR 97232

RELEASE INFORMATION

#	DATE
0	02/07/2013
1	----
2	----
3	----
4	----
5	----
6	----
7	----
8	----

This plan is the property of Bargreen Ellingson and is loaned subject to the condition that it is not to be copied, reproduced, or distributed either in whole or in part, without written permission, and is not to be used in any way detrimental to the best interests of the company.

© 2009 BARGREEN ELLINGSON INC.

DRAWN BY: TJ/SM

PROJECT MANAGER: Jeremy Edmondson

SHEET TITLE: INTERIOR SECTIONS & DETAILS

SHEET NUMBER: ID-5

11 OF 12

PROJECT NUMBER: H-061

08/09/2013 PROGRESS PRINT

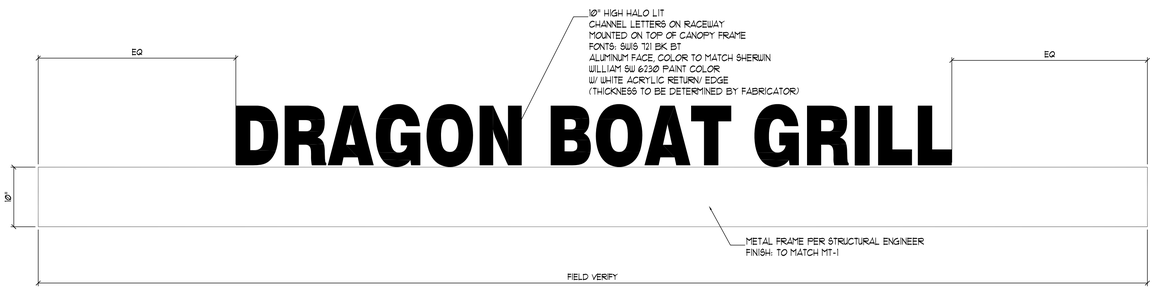

12 ENLARGED ELEVATION
CANOPY SIGN SCALE: 1=1'-0"

DRAWING PROVIDED IS FOR DESIGN CONCEPT ONLY. REFER TO STRUCTURE ENGINEER/ SIGNAGE CONSULTANT FOR CONSTRUCTION DETAILS.

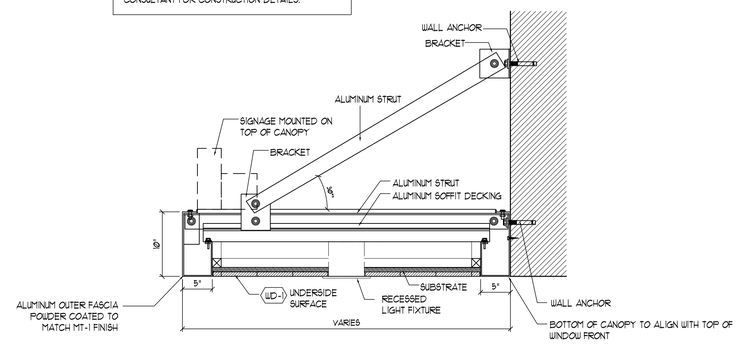

13 ENLARGED ELEVATION
CANOPY STRUCTURE CONCEPT SCALE: 1=1'-0"

08/09/2013 PROGRESS PRINT

BARGREEN ELLINGSON
FOODSERVICE SUPPLY & DESIGN
3232 NW INDUSTRIAL STREET
PORTLAND, OR 97210
Phone: (503) 227-1161
Fax: (503) 345-0738
Website
www.bargreen.com

OREGON CONVENTION CENTER
DRAGON CAFE REMODEL
777 NE MLK BLVD.
PORTLAND, OR 97232

RELEASE INFORMATION

#	DATE
0	02/07/2013
1	----
2	----
3	----
4	----
5	----
6	----
7	----
8	----

This plan is the property of Bargreen Ellingson and is loaned subject to the condition that it is not to be copied, reproduced, or distributed either in whole or in part, without written permission, and is not to be used in any way detrimental to the best interests of the company.
© 2009 BARGREEN ELLINGSON INC.

DRAWN BY:
TJ/SM
PROJECT MANAGER:
Jeremy Edmondson

SHEET TITLE:
INTERIOR SECTIONS & DETAILS

SHEET NUMBER
ID-5.1
12 OF 12

PROJECT NUMBER
H-061