BUILDING NORTH

NOTES:

1. VERIFY ALL DIMENSIONS

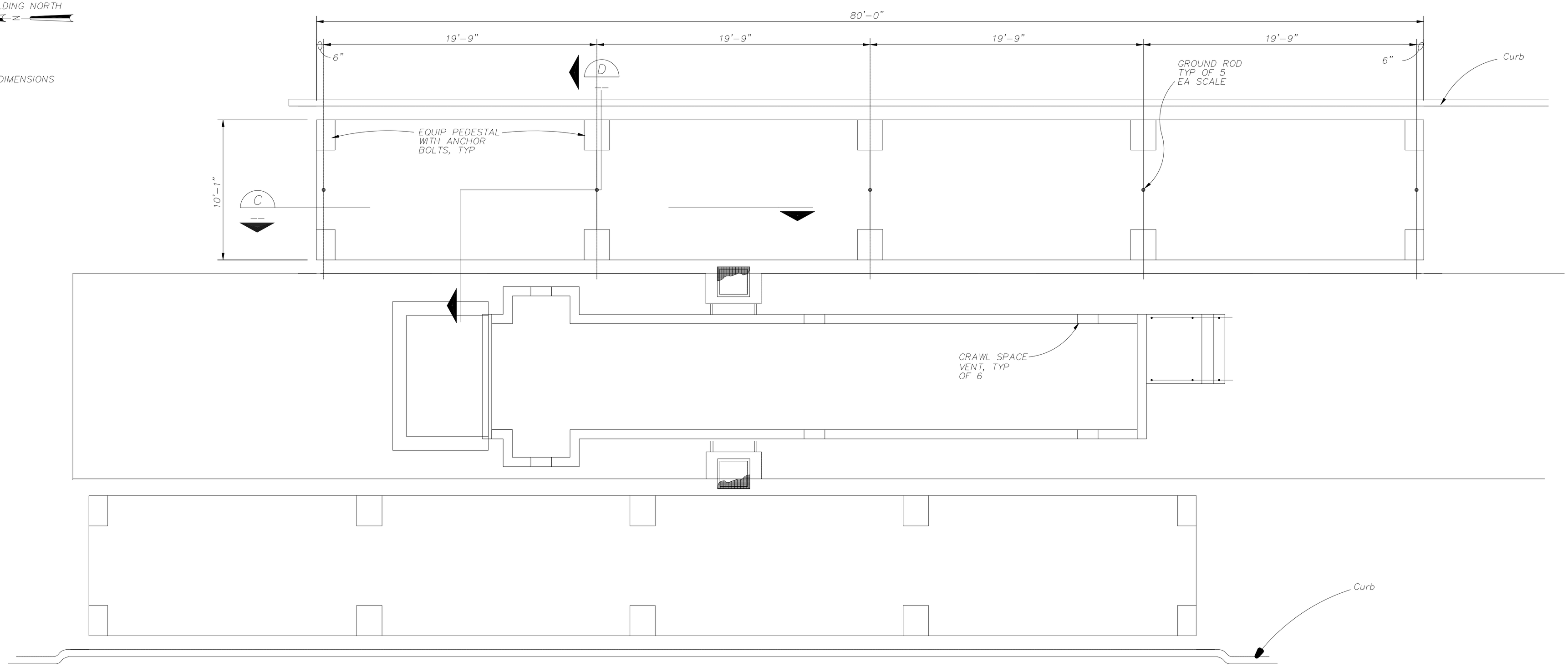

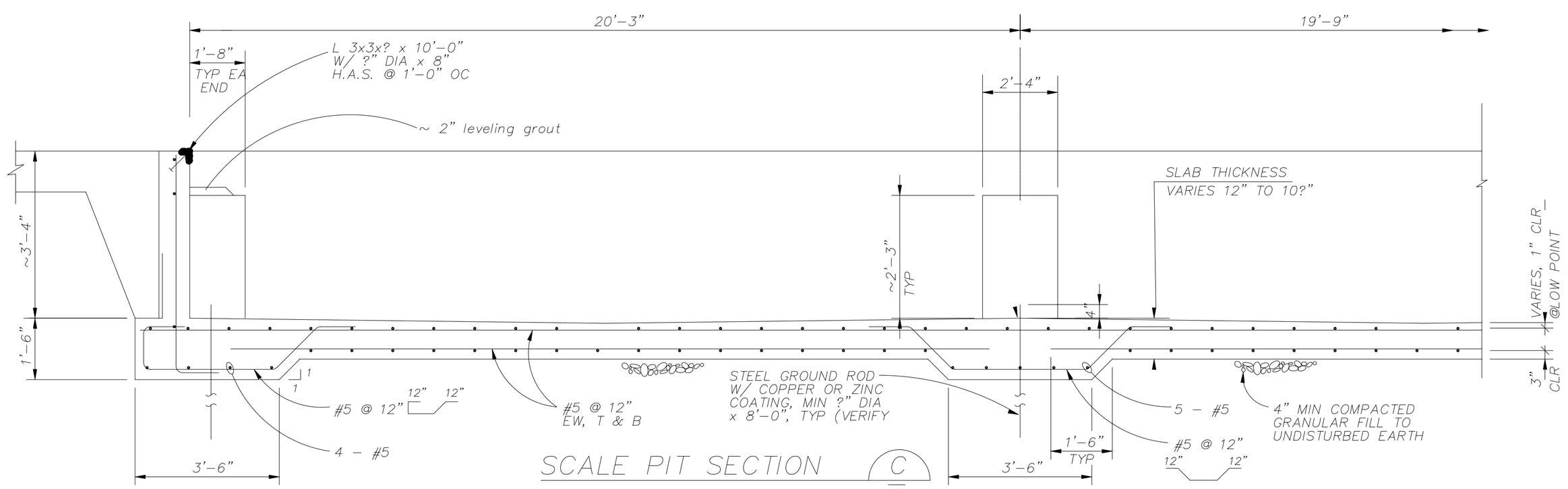

SCALE PIT SECTION C

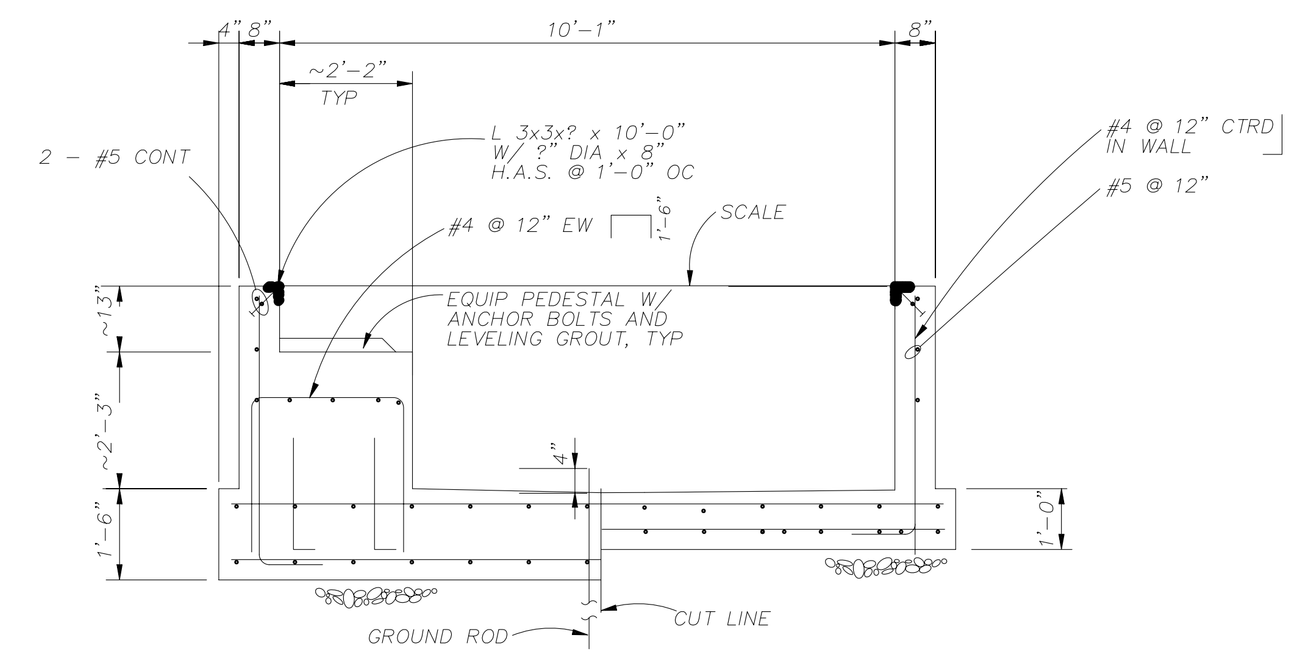

SCALE PIT SECTION D

DSGN					
DR					
CHK					
APVD	NO.	DATE	REVISION	BY	APVD

VERIFY SCALES

BAR IS ONE INCH ON ORIGINAL DRAWING

0 1"

IF NOT ONE INCH ON THIS SHEET, ADJUST SCALES ACCORDINGLY.

MCS SCALE A
PLAN AND SECTIONS

SHEET
DWG NO.
DATE
PROJ NO.