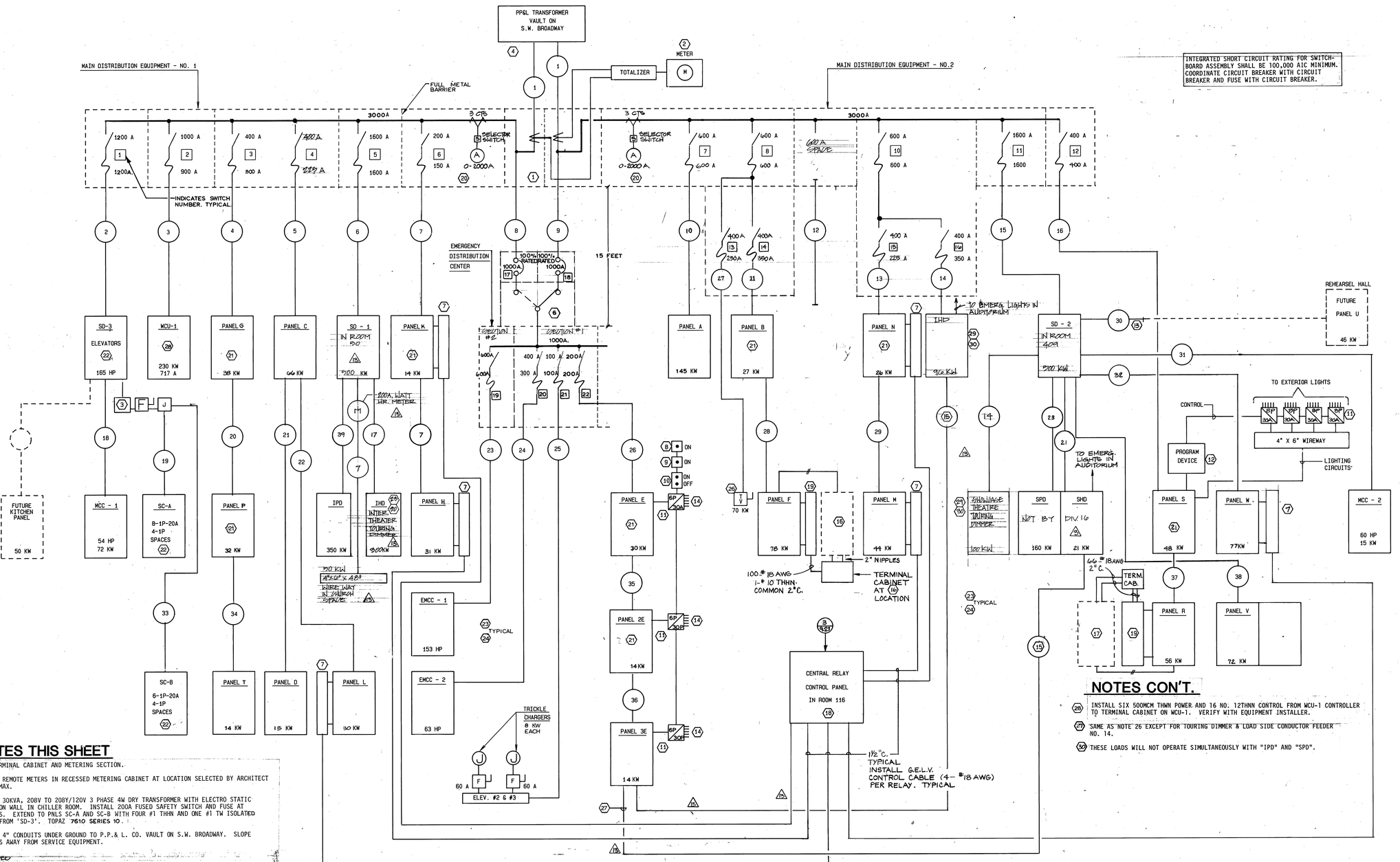

INTEGRATED SHORT CIRCUIT RATING FOR SWITCHBOARD ASSEMBLY SHALL BE 100,000 AIC MINIMUM. COORDINATE CIRCUIT BREAKER WITH CIRCUIT BREAKER AND FUSE WITH CIRCUIT BREAKER.

NOTES THIS SHEET

1. MAIN TERMINAL CABINET AND METERING SECTION.
2. INSTALL REMOTE METERS IN RECESSED METERING CABINET AT LOCATION SELECTED BY ARCHITECT 50 FT. MAX.
3. INSTALL 30KVA, 208V TO 208Y/120V 3 PHASE 4W DRY TRANSFORMER WITH ELECTRO STATIC SHIELD ON WALL IN CHILLER ROOM. INSTALL 200A FUSED SAFETY SWITCH AND FUSE AT 125 AMPS. EXTEND TO PNLS SC-A AND SC-B WITH FOUR #1 THHN AND ONE #1 TW ISOLATED GROUND FROM 'SD-3'. TOPAZ 7510 SERIES 10.
4. INSTALL 4" CONDUITS UNDER GROUND TO P.P.& L. CO. VAULT ON S.W. BROADWAY. SLOPE CONDUITS AWAY FROM SERVICE EQUIPMENT.
5. NOT USED
6. AUTOMATIC TRANSFER SWITCH, 4PSN, 1200 AMP 208Y/120V THREE PHASE.
7. INSTALL GEN. ELECTRIC CO. PRE WIRED 'PAL' RELAY CABINET FOR LOW VOLTAGE CONTROL OF LIGHTING EQUIPMENT. SEE TYPICAL WIRING DIAGRAM DETAIL 4/9.27 FOR EACH CABINET.
8. INDICATES MOMENTARY 'ON' PUSHBUTTON AT CENTRAL RELAY CONTROL PNL.
9. INDICATES 'ON' MOMENTARY PUSH BUTTON AT SECURITY ROOM NEAR FIRE ALARM CONTROL PANEL, ROOM 132.
10. INDICATES MOMENTARY 'ON'-'OFF' PUSH BUTTON IN BOX OFFICE.
11. INDICATES MULTIPOLE ELECTRICALLY OPERATED, MECHANICALLY HELD LIGHTING CONTACTOR.
12. INDICATES PROGRAMMABLE TIMER; PARAGON NO. EC702/A1089 8 CIRCUIT CONTROLLER.
13. STUB EMPTY 2"C. INTO FUTURE REHEARSALHALL IN WALL OR CEILING SPACE.
14. EXTEND EMERGENCY LIGHTING CIRCUITS TO EMERGENCY LIGHTING FIXTURES AND EXIT SIGNS PER DRAWINGS.
15. EXTEND EMERGENCY LIGHTING CIRCUITS IN PERFORMANCE HALL AREA ONLY, TO HOUSE LIGHTING DIMMERS.
16. INSTALL MASTER STATES RELAY PANEL FURNISHED BY PRODUCTION LIGHTING CONTRACTOR. EXTEND ALL LOW VOLTAGE CONTROL CONDUCTORS FROM 'PAL' CABINETS TO THE MASTER STATES RELAY CABINET FOR INTERMEDIATE THEATER LIGHTING INDICATED ON SCHEDULE DETAIL 8/9.27.
17. SAME AS NOTE 16 EXCEPT RELATES TO THEATER LIGHTING INDICATED ON SCHEDULE 9/9.27 FOR SHOWCASE THEATER.
18. CONTROL PUBLIC SPACE LIGHTING WITH LOW VOLTAGE CONTROL SWITCHES IN RECESSED CABINET. INSTALL IDENTIFICATION ON INSIDE DOOR OF CABINET.
19. INDICATES GEN. ELECTRIC CO. 'PAL' RELAY CABINET SIMILAR TO NOTE 7 EXCEPT WITHOUT MOTOR MASTER CONTROLS.
20. PROVIDE CONTINUOUS 1000A COPPER GROUND BUS IN 'MDE'. BOND ALL SECTIONS TO GROUND BUS. CONNECT TO BURIED 500 MCM GROUND IN TRENCH.
21. PROVIDE DUAL LUGS OR FEED THROUGH BUS FOR STACKED PANELS.
22. INSTALL ISOLATED GROUND BUS IN THIS PANEL.
23. INSTALL SEPARATE GROUNDING CONDUCTORS WITH FEEDERS TO PANELS. USE ONE GROUNDING CONDUCTOR FOR NON-ISOLATED GROUND BUS AND A SEPARATE GROUNDING CONDUCTOR FOR THE ISOLATED GROUND BUS. SEE PANEL SCHEDULES FOR GROUND BUS REQUIRED.
24. CONDUIT FEEDERS RISE UP THROUGH BUILDING VOIDS AND CHASES. VERIFY LOCATION AND FEEDER ROUTES WITH ARCHITECT ON THE JOB.
25. PROVIDE 1200 BREAKER SIMILAR TO ITE-GOULD MC-124 WITH EXTENDED TERMINALS AND BOX LUGS SUITABLE FOR FIELD CONNECTION OF PORTABLE DIMMERS - (3-500MCM PER PHASE AND NEUT. ON THE LOAD SIDE).
26. PROVIDE 400 BREAKER SIMILAR TO I.T.E.-GOULD MCJ-44 WITH EXTENDED TERMINALS AND BOX LUGS SUITABLE FOR FIELD CONNECTION OF FIELD TELEVISION POWER SOURCE. 4-250MCM PER PHASE AND NEUT. ON LOAD SIDE.
27. FOUR CIRCUITS THROUGH DIMMER; AUTOMATIC TO FULL BRIGHT ON FEEDERS 6 OR 15 POWER FAILURE. TYPICAL FOR INTERMEDIATE AND SHOWCASE EMERGENCY LIGHTS.

NOTES CON'T.

28. INSTALL SIX 500MCM THWN POWER AND 16 NO. 12THNN CONTROL FROM WCU-1 CONTROLLER TO TERMINAL CABINET ON WCU-1. VERIFY WITH EQUIPMENT INSTALLER.
29. SAME AS NOTE 26 EXCEPT FOR TOURING DIMMER & LOAD SIDE CONDUCTOR FEEDER NO. 14.
30. THESE LOADS WILL NOT OPERATE SIMULTANEOUSLY WITH "IPD" AND "SPD".

FEEDER SCHEDULE

1. 7-4" STEEL TO P.P.&L. CO. STREET VAULT. CONDUCTORS BY P.P.&L. CO.
2. 3-4"C. W/3-500MCM THWN, 1-500MCM THWN NEUT. PLUS GRD. IN EACH CONDUIT.
3. 3-4"C. W/3-350MCM THWN AND 1-2/0TW GRD. PLUS GRD. IN EACH CONDUIT.
4. 1-3"C. W/3-350MCM THWN AND 1-250MCM THWN PLUS GRD.
5. 1 - 2-1/2"C. W/3-4/0THWN AND 1-2/0THWN PLUS GRD.
6. 4-4"C. W/3-500MCM THWN, 1-500MCM THWN PLUS GRD. IN EACH CONDUIT.
7. 1-2"C. W/3-3/0THWN AND 1-1/0THWN PLUS GRD.
8. 3-3"C. W/3-500MCM THWN AND 1-300MCM THWN PLUS GRD. IN EACH.
9. 3-3"C. W/3-500MCM THWN AND 1-300MCM THWN PLUS GRD. IN EACH.
10. 2-3"C. W/3-350MCM THWN AND 1-250MCM THWN PLUS GRD. IN EACH.
11. 1 - 3-1/2"C. W/3-500MCM THWN AND 1-300MCM THWN PLUS GRD.
12. 3-4" PVC. ~~W/TUBED INTO MECH ROM #29 + CAPPED~~
13. 1-2½"C.W/3-4/0THHN AND 1-2/0THWN PLUS GRD.
14. 1 - 3-1/2"C. W/3-500MCM THWN AND 1-500MCM THWN PLUS GRD.
15. 4-4"C. W/3-500MCM THWN AND 1-500MCM THWN PLUS GRD IN EACH.
16. 1 - 3-1/2"C. W/3-500MCM THWN AND 1-300MCM THWN PLUS GRD.
17. 1 - 3-1/2"C. W/3-500MCM THWN AND 1-500 MCM THWN PLUS GRD.
18. 2 - 2-1/2"C. W/3-250MCM THWN AND 1-1/0THWN PLUS GRD. IN EACH CONDUIT.
19. 1-2"C. W/4-NO. THWN (1-NO. 4, ISOLATED GRD.) PLUS GRD.
20. 1-3"C. W/3-350MCM THWN AND 1-250MCM THWN PLUS GRD.
21. 1 - 1-1/4"C. W/4-NO. 3 THWN PLUS GRD.
22. 1 - 1-1/2"C. W/4-NO. 1 THWN PLUS GRD.
23. 2-3"C. W/3-350MCM THWN AND 1-350MCM THWN PLUS GRD.
24. 1 - 2-1/2"C. W/3-4/0THWN AND 1-NO. 1 THWN PLUS GRD.
25. 1-1"C. W/3-NO. 3 THWN PLUS GRD.
26. 1-2½"C.W/3-4/0THWN, 1-2/0THWN PLUS GRD.
27. 1-2½"C. W/4-250MCM THWN, 1-1/0 THWN
28. 1 - 3-1/2"C. W/3-500MCM THWN AND 1-300MCM THWN PLUS GRD.
29. 1-½"C. W/3-4/0THWN AND 1-2/0THWN. PLUS GRD.
30. 1 - 2-1/2" EMPTY CONDUIT.
31. 1 - 2-1/2"C. W/3-350MCM THWN AND 1-NO. 1THWN. PLUS GRD.
32. 1-3"C. W/350MCM THWN AND 1-NO. 4/0THWN
33. 1-2"C. W/4-NO. 1 THWN (1-NO. 4TW ISOLATED GRD) PLUS GRD.
34. 1-1½"C. W/3 NO. 2 THWN AND 1-NO. 4 THWN PLUS GRD.
35. 1-2½"C.W/3-4/0THWN AND 1-2/0THWN PLUS GRD.
36. 1-2½"C.W/3-4/0THWN AND 1-1/0THWN. PLUS GRD.
37. 1-3½"C.W/3-500MCM AND 1-300MCM THWN PLUS GRD.
38. 1-3½"C.W/3-350MCM THWN AND 1-3/0 THWN PLUS GRD.
39. THREE 3-1/2"C. W/3-500MCM THWN AND 1-500 MCM THWN PLUS GRD. IN EACH.

Portland Center for the Performing Arts

The City of Portland

Honorable Mildred A. Schwab
Commissioner in Charge

Ronald K. Ragen
Chairman
Performing Arts Center Committee

Architects

Broome, Oringdulph, O'Toole, Rudolf & Associates pc
ELS Design Group
Barton Myers

Project Address
733 N.W. 20th Avenue
Portland, Oregon 97209
(503) 226-1575

Consultants

Theatre Projects Inc.
Theatre Consultants

R. Lawrence Kirkegaard & Associates
Acoustician

CH2M Hill
Structural Engineers

C.W. Timmer Associates
Mechanical Engineers

Interface Engineering Inc.
Electrical Engineers

REGISTERED PROFESSIONAL ENGINEER 4182 OREGON October 4, 1984 KENNETH L. MEHLIG

INTERFACE ENGINEERING INC.
Consulting Engineers
6542 SE Lake Road, Milwaukie, Oregon 97222
(503) 656-4366
CONTACT: KEN MEHLIG OR JOAN EDDY
PROJECT NO. 82-102.1

Target	Revision Item	Revision Date
1	Addendum #1	10/29/84
2	Addendum #2	11/06/84
3	Addendum #4	11/13/84
4	Addendum #5	11/21/84
5	Proposal Request #1	03/01/85
6	Proposal Request #2	03/01/85
7	Proposal Request #3	03/01/85
8	Proposal Request #4	
9	Proposal Request #5	03/01/85
10	Proposal Request #6	
11	Proposal Request #7	03/01/85
12	Proposal Request #8	03/01/85
13	Proposal Request #9	03/01/85
14	Proposal Request #10	03/01/85
15	Proposal Request #11	03/01/85
16	Proposal Request #12	03/01/85
17	Proposal Request #13	03/01/85
18	Proposal Request #14	
19	Clarification Items	03/01/85
20	MISCELLANEOUS ITEMS	03/01/85

Revisions

New Theatre Building

POWER ONE-LINE DIAGRAM

Date **OCT. 12, 1984**
Scale
Drawing No. **9.29**

CARCADE A. & B. SUPPLIES CO.